Development of an Exoskeletal Robotic Hand

MER 497-MER 498: Senior Project

Final Report

By: Peter Homnick

Partner: Charles Waters

Advisor: Professor Rapoff

Due: 3/19/2009

Table of Contents

Chapter 1

Introduction

Presently there has been much development of human-like robotic hands, with most of this research dedicated to creation of prosthetics to aide a handicapped person with everyday tasks. Many of these prosthetics are beginning to use sensors that read muscle movement or nerve signals from the user to control the movement of the prosthetic limb. These prosthetic hands can greatly resemble the human hand in both aesthetic appearance and function, although these hands are only designed to aid the handicapped. As technology increases these designs can be modified to increase gripping capabilities of an average person; mimicking their actual hand movements while increasing strength. A design that can accomplish human like movements while increasing grip strength can be very useful for militaristic purposes, especially since grants have currently been presented to companies for the creation of an exoskeletal robotic suit.

1.1 The Problem (Sarcos)

In the year 2000 the Defense Advances Research Projects Agency (DARPA) awarded a grant to Sarcos for the creation of a self-powered exoskeleton suit, which would eventually be useable by the military. This suit was created to fit around a person and mimic the user's movements, thus reducing the amount of force the user needs to exert to perform a task, such as lifting an eighty pound weight. This suit was powered by an engine, which was located on the back of the suit and can power it for a single day on one tank of fuel. This engine powers hydraulics and servos that add force to the users movements; these are controlled by sensors located in the frame of the exoskeleton, which send signals to the servos to extend or flex the corresponding link in the exoskeletal suit to the user's limb-movement. Upon completion the prototype was missing a very important part, which greatly limits the function of the suit, a robotic hand. As shown below in Figure 1, the suit currently only allows for attachment of a simple hook, which has limited applications.

Figure 1

Figure 1: This figure shows the exoskeletal suit created by Sarcos, which, as shown in the picture only has a hook and lacks a robotic hand.

For this suit to be fully functional a robotic hand would need to be added in place of the detachable hook. The addition of a robotic hand, which mimics the movements of the user's hand, would greatly increase the function of the suit by giving the user the ability to grip objects as the human hand would without actually fatiguing the user. Upon further research, described in the following sections, it was determined that there was no current robotic hand in production that would be sufficient for the suit.

1.2 The Objective

The objective of this project was to design an exoskeletal robotic hand that can be integrated into the previously designed system created by Sarcos. A robotic hand added to the exoskeletal suit would greatly increase the function of the suit, thus allowing the user to complete more complicated tasks than a simple hook would allow. The hand must be human like to maintain the functional capacity that a human would have while not wearing the suit, thus the suit would not in any way impair the user from completing any task involving picking up or gripping an object. The exoskeletal robotic hand would react to sensors located on the handles of the suit; the signals from flexion or extension of the user's fingers would control the robotic hand's movement, which would mimic the user's movement.

Chapter 2

Background (Anatomy of the Human Hand)

2.1 Bones of the Human Hand

During research the human hand was found to be made up of twenty-seven bones: eight carpals, five metacarpals, and fourteen phalanges. As shown below in Figure 2, the eight carpals (blue) were located at the bottom of the hand, which make up the bones of the wrist. Located above the carpals or wrist were the five metacarpals (green) that make up the bones of the palm. Connected to the metacarpals were the phalanges, which can be broken down into three different groups: the proximal phalanx (red), middle phalanx (yellow), and distal phalanx (pink). Progressing from the metacarpals they were the first, second, and third bones, respectively, of each finger, except for the thumb. The thumb was made up of only the proximal, first, phalanx and the distal, third, phalanx.

Figure 2

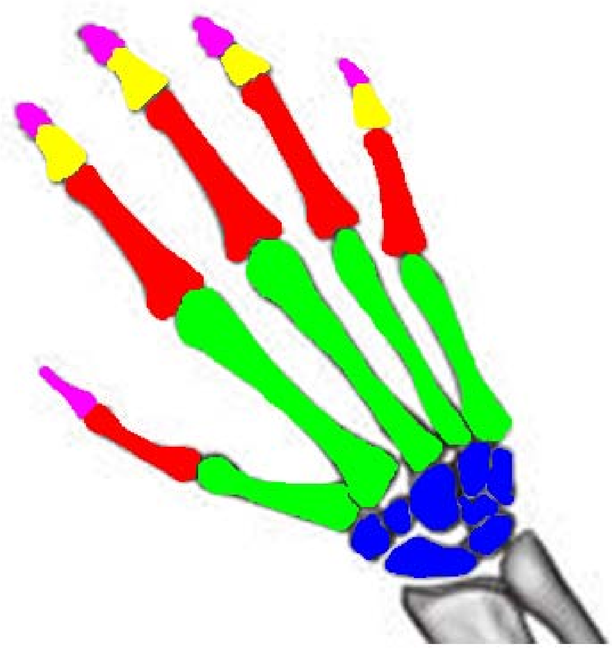

Figure 2: Displays a color coded picture of the different bones of the human hand. The color code follows: blue for carpals, green for metacarpals, red for proximal phananx, yellow for middle phalanx, and pink for the distal phalanx.

2.2 Joints of the Human Hand

There were found to be fifteen joints in the human hand: five metacarpal phalanx (MP) joints, four proximal interphalanx (PIP) joints, and five distal interphalanx (DIP) joints. As shown below in Figure 3, the five metacarpal phalanx joints (blue) were located between the metacarpals and the proximal phalanx; these were the first joints located in the hand with a high range of motion. The next joints were called the proximal interphalanx joints (green), which connect the proximal phalanx to the middle phalanx. There were only four of these joints since the thumb does not have the middle phalanx; the second joint on the thumb was classified as a distal interphalanx joint. The last joints on the hand were the distal interphalanx joints (red), and were located between the middle phalanx and the distal phalanx. The location of the cartilage and ligaments that make up the joints allow the three bones of the phalanges to act as simple hinges. There was also a synovial sac, located in these joints, which provides sufficient lubrication for a very low coefficient of friction brought on by the hinging motion of the phalanges.

Figure 3

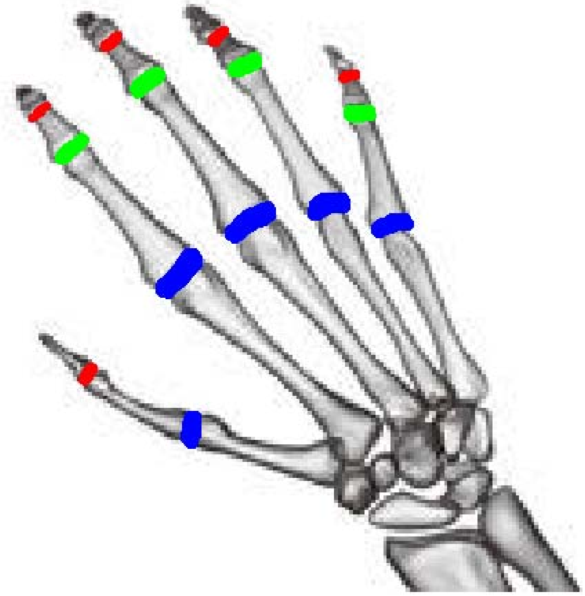

Figure 3: Displays the joints of the human hand. The color code follows: blue for the metacarpal phalanx joints, green for the proximal interphalanx joints, and red for the distal interphalanx joints.

A cross-sectional view of hand is shown below in Figure 4, specifically a metacarpal and phalange, showing a side view of how these hinge joints fit together. The joints were also color coded as above: metacarpal phalanx joint (blue), proximal interphalanx joint (green), and the distal interphalanx joint (red). As shown below the end of the metacarpal which connects the metacarpal to the proximal phalanx was convex, while the end of the proximal phalanx touching the metacarpal was concave; making up the metacarpal phalanx joint which was similar to a simple hinge joint. The proximal interphalanx joint and the distal interphalanx joint were structured in the same manner.

Figure 4

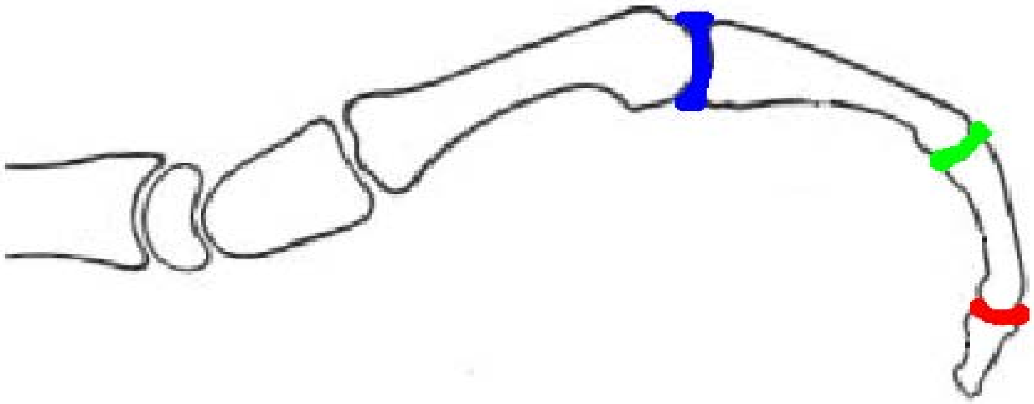

Figure 4: Displays a side view of the hand specifically the metacarpal phalanx joint (blue), proximal interphalanx joint (green), and the distal interphalanx joint (red).

2.3 Capacity of the Human Hand

The mechanics of the hand were broken down immediately into two separate groups: gripping movements and skilled movements. Gripping movements utilized the bones and joints of the hand to grasp objects in six main ways: cylindrical, tip, hook or snap, palmar, spherical, and lateral. Utilizing precise control of the hand one could perform each of the six grips, as shown below in Figure 5.

Figure 5

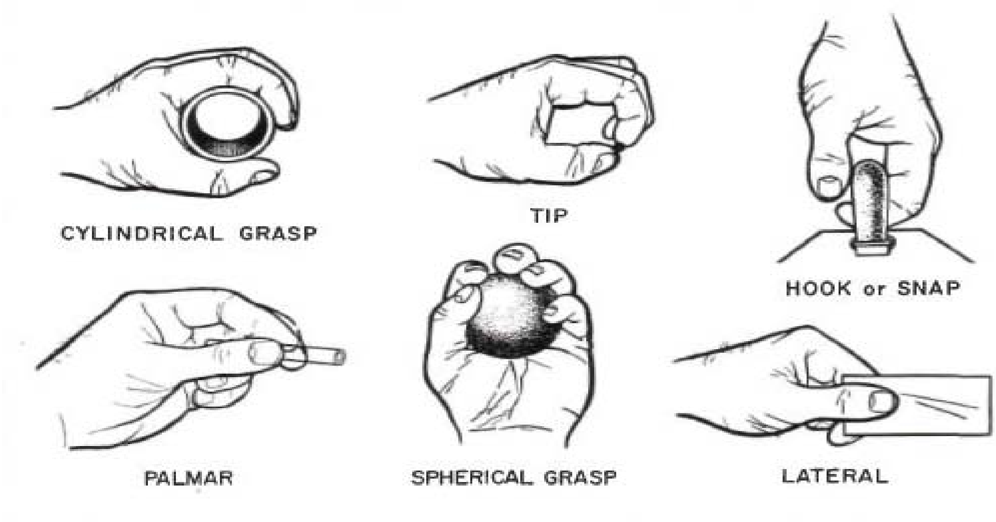

Figure 5: This figure shows the six different types grips the human hand is capable of producing.

Skilled movements, such as buttoning a button or writing, required precise control over the movements of the hand. A task such as this also required a muscle memory from repetition of the stated tasks for one to become proficient at them.

2.4 Degrees of Freedom of the Human Hand

Research found that the human hand had twenty-nine different bones and twenty-nine joints which account for the twenty-seven degrees of freedom (DOF). The wrist accounted for six of these DOFs. The interphalangeal joints each accounted for one DOF, for a total of nine. The metacarpal to phalangeal joints each accounted for two DOFs, for a total of ten. The last two DOFs were accounted for in the base of the thumb, which has two more DOFs than the other fingers.

Chapter 3

Background (Robotic Hands)

3.1 Three Finger Robotic Hands

Robotic hands were first developed with simple construction that did not resemble a human hand either in capabilities or appearance; this was due to the complexity of the human hands mechanics and movements. One of the first Robotic hands was the MARS hand, which was a hand made up of three fingers that had a total of twelve degrees of freedom; much less than the human hands twenty some degrees of freedom. The hand had only six brushless DC motors, which makes the hand under actuated. To be fully actuated a robotic hand must have an actuator for each degree of freedom. Under actuated robotic hands were very common and were the only robotic hands built until recently. Actuators can be many different mechanisms including, electric motors, pneumatics, or hydraulics. An example of an under actuated robotic hand with three fingers is shown below in Figure 6. Figure 6 shows how the orientation of the fingers can be changed for different gripping applications, mainly for smaller or larger objects.

Figure 6

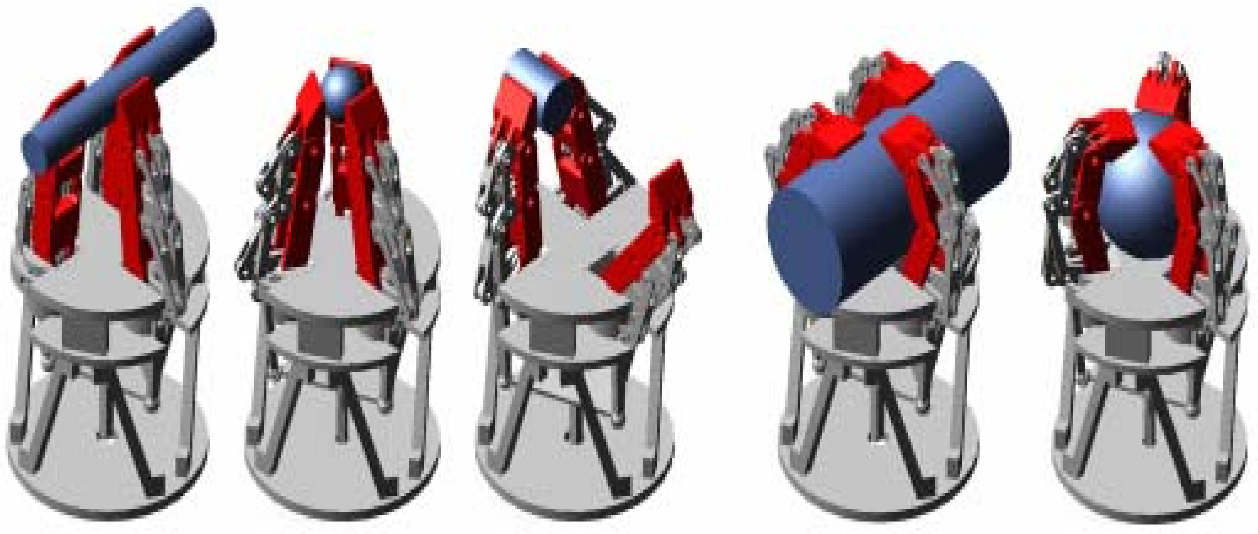

Figure 6: This figure displays the different orientations capable of an under actuated three finger robotic hand, in which the base of two fingers can rotate.

A few years after the MARS hand was constructed, the SARAH hand was built, which only contained two motors instead of six. One motor controlled orientation of the fingers, while the other controlled the grasp. Since a single motor was controlling the grasp on this design all of the fingers close at once and continue to close until each one was as firm as it can possibly get. Figure 7, below, shows the comparison between the MARS hand and the SARAH hand.

Figure 7

Figure 7: The MARS hand is displayed on the left, while the SARAH hand is displayed on the right.

The SARAH hand was also adapted to operate on pneumatics instead of a very complex system of motors and gears. This version of the hand was developed because pneumatics (or hydraulics) provided a much simpler design for creating this three finger, under actuated, robotic hand. The use of pneumatics also allowed for the hand to be smaller than the previously developed model with brushless DC motors, since the compressor does not need to e located on the robotic hand. The pneumatic model is shown below in Figure 8.

Figure 8

Figure 8: The pneumatic model is much smaller than either of the previously created models, although a compressor is needed to provide air pressure.

3.2 Four and Five Finger Robotic Hands:

Recently there has been much research into developing a robotic hand that mimics the structure and mechanics of the human hand. There were three basic types of human like robotic hands that were researched: tendon (cable) driven, gear driven, rod driven. Each of these designs had its advantages and disadvantages which were weighed against each other for final design selection.

3.21 Tendon Driven Robotic Hands:

Tendon driven robotic hands have a very large gripping strength capacity since the tendons can be controlled from an offsite motor that can provide much more power and torque than miniature brushless DC motors located in each joint. A disadvantage to this type of robotic hand was that a single cable controls the movement of the entire finger, thus there was no control of a single joint at a time, only flexion or extension of the entire finger. An example of a tendon driven hand is shown below in Figure 9, although a motor would need to be added to the end of the cable to make it robotic.

Figure 9

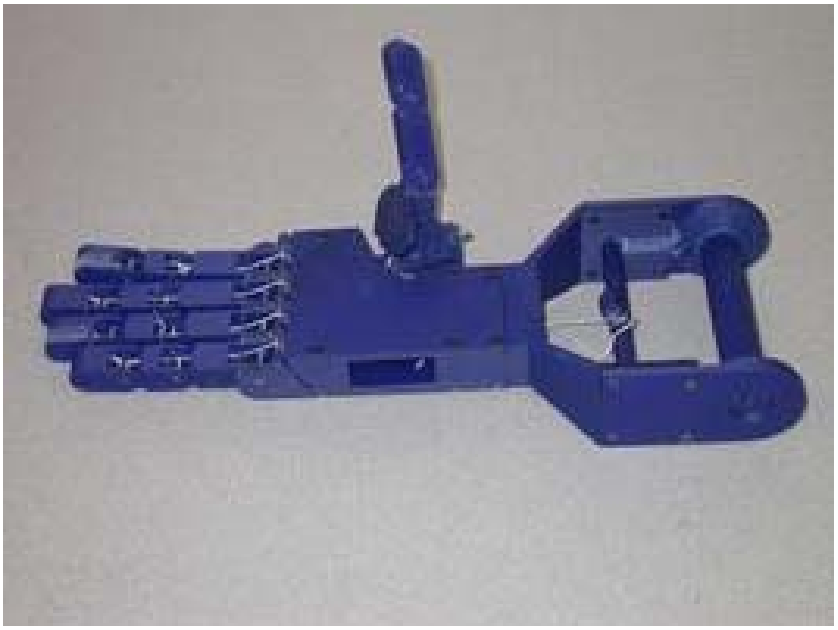

Figure 9: This is a prototype of a tendon driven hand with a single actuator, the user's hand.

The model shown above uses a single actuator, the user's hand, to control the movements of the fingers. This could easily be adapted so that an actuator controlled each of the five fingers, thus allowing the user to have more control of the robotic hand. This design also utilizes springs to ensure the hand returns to its natural, open, position. The orientation of the springs, motion of the cables can be reversed, making the closed position natural with the cables opening the hand. This can cause some difficulties because the strength of the springs would ultimately determine the maximum gripping strength of the robotic hand, although this would be advantageous for a robotic hand only performing specific tasks.

3.22 Gear/Belt Driven Robotic Hands

There were a few different types of gear driven robotic hands that were found during research: a direct mesh of the motor's drive gear to a stationary gear which moved the joint or utilizing a cable or chain in between the drive gear and stationary gear. Both of these designs allowed for a single motor to control each joint of the finger, which allowed the user to have more control of the robotic hand's movements. Thus, these robotic hands were superior to a cable driven hand in their ability to precisely control the movements of each joint, although because the motors have to be smaller to fit in the hand the ultimate output force was not as large.

3.22A Gear Driven

Gear driven robotic hands were found to utilize a miniature motor, located near each joint, to control that joint; therefore a robotic hand with four fingers needed eleven degrees of freedom (only allowing for the thumb to have two degrees of freedom). With this many motors and controls these robotic hands became very complex and difficult to design and construct. Since the motors for this design needed to be located near each joint the motor size would control the dimensions of the fingers and hand. Thus a robotic hand that needed a high output force would have to be larger than a robotic hand that only needed a small output force. Gears can be used to change the motor output (increase or decrease torque) to the desired output, although plastic gears would not be sufficient for high torques, metal gears would need to be installed to handle high torque output. An example of a gear driven robotic hand is shown below in Figure 10.

Figure 10

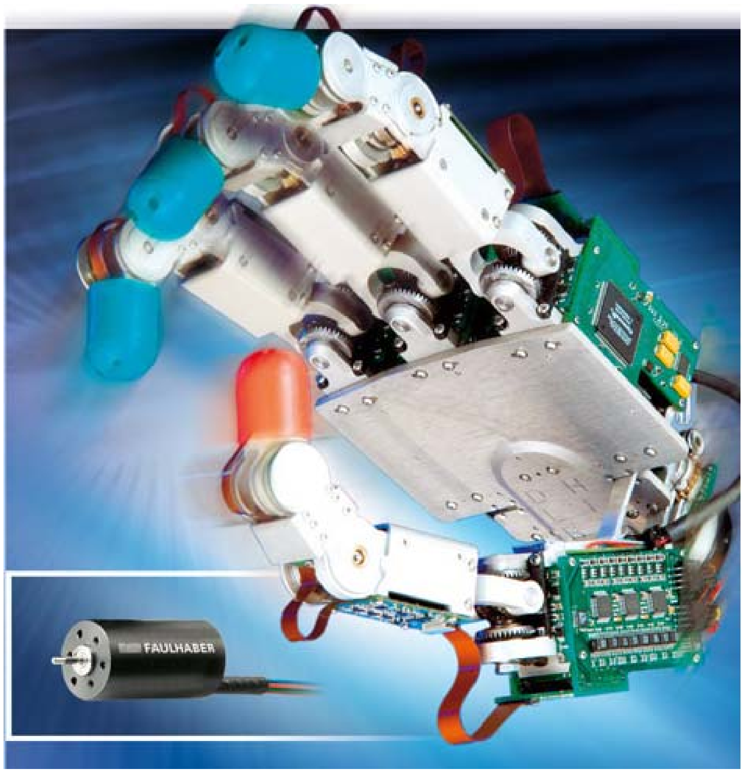

Figure 10: Utilizing miniature Faulhaber brushless DC motors a robotic hand was created that can mimic the human hand, minus one finger.

3.22B Belt Driven

Belt driven robotic hands also used a separate motor for each joint, although unlike the gear driven hands the motors for belt driven hands were all located in the palm. By having all of the motors in the palm the size of the fingers would be reduced to be closer to the actual size of human fingers. Like the gear driven hand this model would require the use of eleven miniature motors to control the movement of the hand. This type of robotic hand was also very complicated, as shown in Figure 11 below, since it used a complex system of motors, pulleys, and belts to control the movement of each joint. The system shown below also incorporated a spring system into the belts to help keep the robotic hand from exerting too much force on an object. This could also be done by using rubber belts that will stretch at a desired output, which would also prevent the hand from exerting too much force on an object. Because of the incorporated safety built into the belts this hand would be safer to use with delicate objects than the gear driven hand, although there could be problems with belt slippage during high torque situations that would not exist in a gear driven hand.

Figure 11

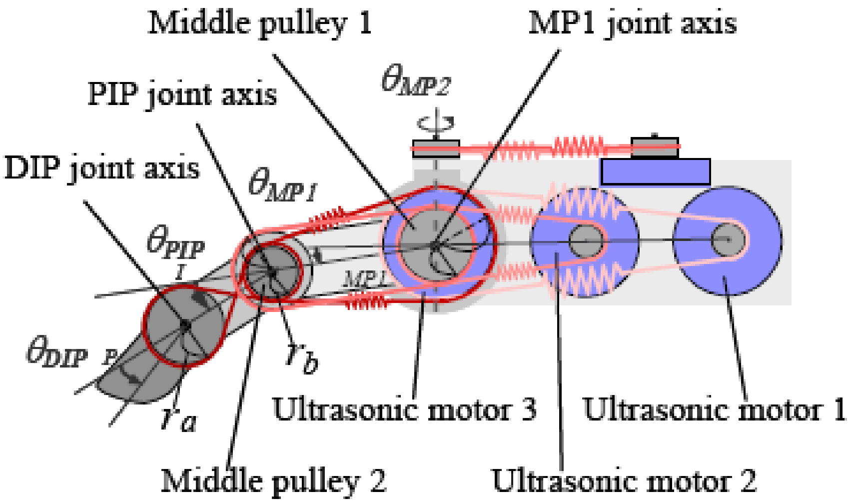

Figure 11: The complex system of motors, pulleys, and belts for this design is shown above.

3.23 Rod Driven Hands

The researched rod driven hands were very different from both the gear driven hand and the belt driven hand. Rod driven hands used a complex system of linkages to control the flexion and extension of the entire finger. Since the movement of the entire finger was controlled by one actuator the robotic hand in this design did not have as much control as the gear or belt driven designs. The design required only five actuators, which allowed for the hand to be made to exact human size, which might not be possible with the gear or belt design. The rod driven hand would also be much lighter by reducing the number of motors and gearing, or even by use of a pneumatic cylinder and rod powered by an offsite compressor. An example of a rod driven robotic hand is shown below in Figure 12.

Figure 12

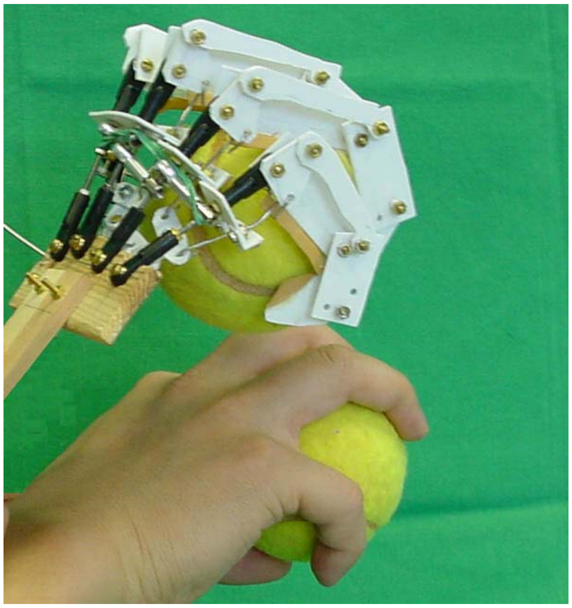

Figure 12: An example of a rod driven robotic hand.

Chapter 4

4.1 Specifications for the Robotic Hand

Since the robotic hand was designed for an exoskeletal suit, while keeping human like movements and increasing gripping strength, the robotic hand was simplified compared to the human hand. Due to the complexity of the human hand, only the gripping mechanics of the hand were analyzed. By concentrating on only the gripping mechanics, the very sensitive and precise movements required for skilled movements such as closing a safety pin were not included in this project.

Not every DOF was needed for gripping, thus many were removed when the design was created. Since the carpals mainly controlled movements of the wrist, the eight carpals of the hand were not studied in this project to maintain focus on the mechanics of the hand; for the purpose of this project a fixed wrist had effect on the outcome. The movements of the metacarpals were also neglected since they were minimal, which had only a minor affect on grasping on object. By neglecting these parts of the hand and wrist many DOF's were removed from the hand. By removing these unneeded DOF's and treating the fingers as simple hinge joints, there were only fourteen DOF's remaining.

It was also determined that it would be most practical for the robotic hand used in the application to be under actuated. Under actuation would allow for stronger motors to be mounted on the base of the hand, instead of much smaller motors controlling the motion of each finger link. This did have a large impact on choosing the type of hand desired for the design of the exoskeletal robotic hand.

4.2 Design Selection

To choose the correct type of robotic hand for the application of use on an exoskeletal frame the positives and negatives of each of the types of robotic hands were weighed against each other. Compromises were also made in this process, since the main criteria for choosing the type of robotic hand for this application was overall grip strength and human like movement and aesthetics.

4.21 Three Finger Robotic Hand

All of the three finger robotic hands researched were under actuated, which does not negatively affect decision criteria since under actuated hands can have a large output force. Three finger robotic hands can also change finger orientation, which allows for the robotic hand to mimic human gripping capabilities. Three finger robotic hands were not chosen for this application because they do not display human characteristics or aesthetics. The idea of using an under actuated robotic hand was useful later in the design process.

4.22 Four and Five Finger Robotic Hand

Four and five finger robotic hands resemble the human hand both in characteristics and aesthetics. There were, however, three different types of four and five finger robotic hands: tendon driven, gear/belt driven, and rod driven. Between these three different types, they ranged from under actuated to fully actuated, which greatly affected design choice since fully actuated hands normally lack high output forces. A combination between these different designs was chosen for the final design.

4.23 Tendon Driven Robotic Hand

Tendon Driven robotic hands researched were under actuated, which fits the design criteria. There was, however, one major flaw with tendon driven hands. Motion can only be controlled in one direction, either opening or closing of the robotic hand. This caused one motion to be controlled by springs or required a complex set up with two tendons (cables) controlling motion with two actuators for each finger. Since it was desirable for the final design to be able to control motion in both directions, with only one motor, the tendon driven hand was not chosen for this application.

4.24 Gear/Belt Driven Robotic Hand

There were a few different types of gear/belt driven robotic hands researched for this project. All of these designs were fully actuated, which did not follow the design criteria. They did follow the rest of the design criteria by mimicking the human hand in characteristics and aesthetics. The gear driven robotic hand and the belt driven robotic hand each had their own advantages and disadvantages.

4.24A Gear Driven

As previously stated the gear driven hand studied during the research process used a fully actuated design, which required many small electric motors and a complex electrical and computer program for control. A gear system mixed with electric motors does, however, provide a good solid base for motion design since they can be various sizes and gear ratios. Although a single motor and gear system for each finger would require a complex system of gears or linkages to control the motion of the robotic hand. The geared robotic hands researched were not chosen for this application.

4.24B Belt Driven

The belt driven robotic hand was very similar to the gear driven robotic hand, but used belts and sheaves to control motion. This application would be advantageous since safety could be built into the belts, since they would stretch and disengage from the sheave. This safety was practical for this application since the small motors, required for the fully actuated system, would not have a high enough output force to require a safety factor. The stretching of the belt could cause the grip to fail during large load applications. The belt driven robotic hand was not chosen for the final design because of fully actuated design and possible belt to cheave slippage.

4.25 Rod Driven

Rod driven robotic hands were very different from both the gear driven and the belt driven hand. Rod driven hands were under actuated, which fits the design criteria, since they allowed for a larger single motor for control of each finger or the entire hand. Rod driven hands required a complex system of linkages and a linear motion to control them. These hands did not have full control of each finger link, although this was not required in the design criteria. The rod driven hand was the best choice for the exoskeletal robotic hand design, although it was necessary to modify the basic design.

4.26 Final Selection

Out of the different designs researched: the three finger robotic hand, the four and five finger robotic hand, gear driven, belt driven, tendon driven, and rod driven, the chosen design was a mixture. The design chosen was a five finger robotic hand that was controlled by linkages, like the rod driven hand; although a gearing system was chosen to control the movement of the fingers instead of a rod. A single actuator was also possible for each finger application, making the hand under actuated. Therefore the design chosen sacrificed complete control of every link for a largely increased total gripping strength.

4.3 First Solid Works Design

The first design for the project was created using Solid Works, although the design was not correct and the linkage did not move properly. The first link to move when a force was exerted on the pivot joint should be the proximal phalanx, which was not occurring with this design. Another problem with this design was that the connecting rods were not the correct length for the desired range of motion, which kept the finger from completely closing during the flexion stage. The links in the finger also did not move in the correct order. To solve this problem a spring with low compression was be placed between the proximal and middle phalanx, thus this joint became stiffer allowing the proximal phalanx to move first. When the proximal phalanx struck an object it stopped and the force from the pivot joint to the first joint connector to the middle phalanx overcame the compression force in the spring; causing the middle phalanx and the distal phalanx to move until they also struck the object or completed their range of motion. A picture of the first design on Solid Works is shown below in Figure 13.

Figure 13

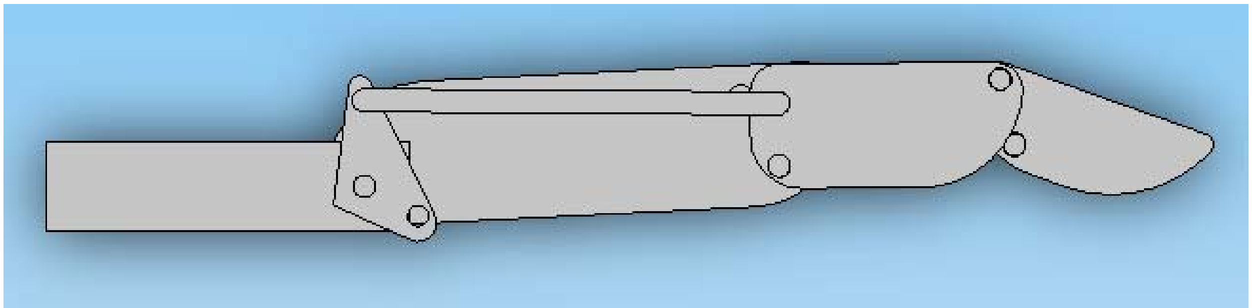

Figure 13: The first design, which was created using Solid Works software.

4.4 Working Model Design

Working Model was used to create a two-dimensional model of a single finger of the robotic hand. First the links were sketched on paper giving specific dimensions for the link and pin locations in the link. Then, using the coordinate system which was built into Working Model each piece was constructed to the correct dimensions. Next the coordinates of the lower left hand corner of each of the links were determined. Based on these coordinated and the previously sketched links the pins were accurately placed by entering in their coordinates (which were calculated by the dimensions from sketches in Appendix A) to the software. By modifying the lengths of Rod One and Rod Two the correct range of motion for the finger was obtained. Shown below, in Figure 14, is the completed model of the finger created in Working Model.

Figure 14

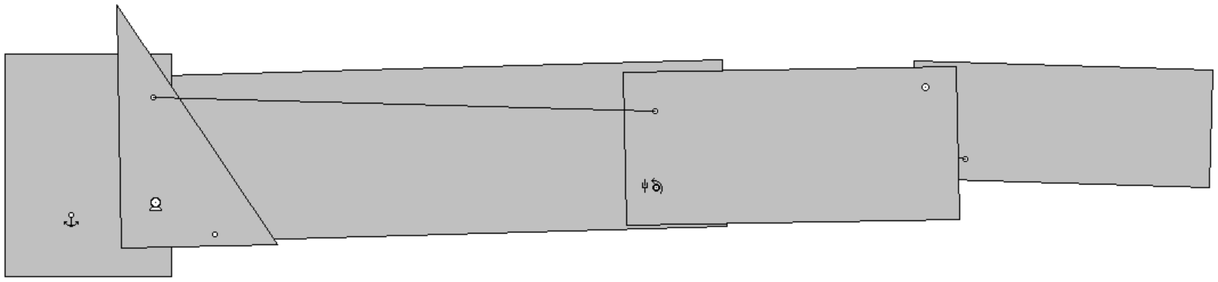

Figure 14: This figure shows the complete linkage system which was used for the gripping simulations of objects in various locations of the mechanical finger.

Once the entire model was constructed and pinned together a motor was added to the tertiary link, which controls the movement of the entire linkage system. A link was pinned to the tertiary and the proximal phalanx-link to simulate how the finger would be connected to the rest of the robotic hand. This link was then anchored, since the hand acts as an anchor to finger movement. A damper was also added to the pin joint connecting the proximal phalanx-link to the middle phalanx-link, which was done to prevent the link from moving first. This can be replicated on the actual prototype by adding a rotational spring to the joint or by increasing the stiffness of the joint. Objects were then placed under each of the links: the proximal phalanx-link, the middle phalanx-link, and the distal phalanx-link, respectively. Simulations were then created to demonstrate how the model would react to the object, or how the finger would form a grip around the object (can be viewed on the project website). The range of motion is also displayed in Appendix B.

4.5 Solid Works Design of Complete Robotic Hand

Using the dimensions that were determined last week, by using the program Working Model, hand sketches were created complete with dimensions and notes. These hand sketches were modified to give the fingers more width, by creating a linkage system that would work like the previous design, but also have a right side, left side, and bottom. These sketches were then used for creating parts on Solid Works. Each of the parts were created as a single part and then combined in an assembly to form five fingers and the palm of the hand. The thumb was fixed at a 45 degree angle, to reduce the complexity and to allow for a single actuator to control the movement, like each of the other four fingers. Rubber padding was added to the palm of the hand to help increase friction when gripping an object. The rubber also serves another purpose; it helps to reduce the impact when the hand comes into contact with an object. The creation of a model of this assembly on Solid Works added depth to the previous design. With this three-dimensional model the interaction between the fingers and palm were studied from all angles. A picture of the final design is shown below in Figure 15.

Figure 15

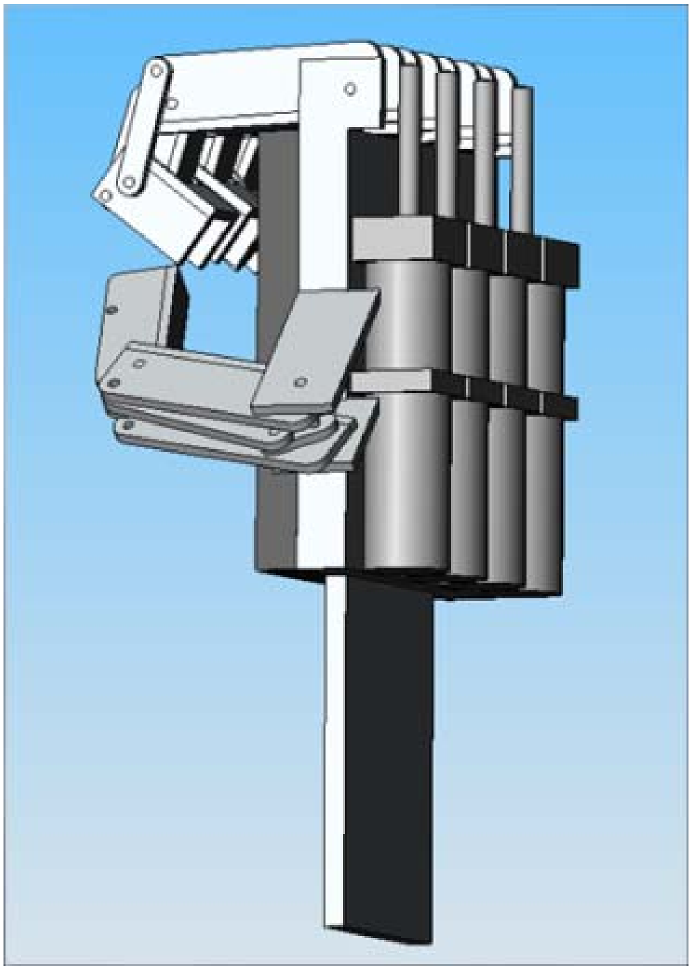

Figure 15: This picture shows the final design of the robotic hand.

Chapter 5

Pre-Construction

5.1 Material Selection

Originally 2024 aluminum was going to be used for the construction of the exoskeletal robotic hand, although it was determined to be the incorrect choice upon further research. 2024 aluminum was one of the strongest aluminum alloys available, but it had a few negative qualities which would greatly impact this project. First, 2024 aluminum was very difficult and sometimes even impossible to weld correctly; this was a major problem since the sides and bottoms of each finger must be welded together. Originally the sides and bottom were going to be screwed together, but it was determined that this would create weak spots, thus possible failure points, which was unacceptable for this project. Due to the difficulty, impact on overall strength after welding, and price 2024 aluminum was rejected as the chosen material.

After further research a somewhat weaker aluminum, weaker than 2024, was found: improved-strength basic aluminum 3003. This material was chosen because of its improved strength over basic aluminum and its ability to be easily welded without greatly compromising the strength of the aluminum alloy. 3003 aluminum alloy was also approximately one quarter of the price of 2024 aluminum alloy, which will allow for funds to be used elsewhere. 3003 aluminum alloy was used for all of the parts that need to be welded, as well as, the palm of the robotic hand. Thus, two 12” x 12” sheets of 1/8” 3003 aluminum alloy were be purchased from

McMaster-Carr, which was be used for construction of the finger links (sides and bottom). Since 3003 aluminum alloy was not available in the needed dimensions, 6” x 6” piece of 1” thick, for the palm of the robotic hand, multipurpose 6061 aluminum alloy was used instead. 2024 aluminum alloy was used for the pins which act as the hinge joints between the different parts of the robotic fingers and hand. A 36” by 1/8” rod was purchased to make the pins (only available in 36” or 6’).

5.2 Solid Works Drawings

Drawings of the previously made parts on Solid Works were created for submission to the machine shop. It was determined, however, best to make a single finger model on the rapid prototype to ensure that all of the linkages worked properly together. The drawings for the first complete model of the robotic hand are not shown since they were modified later. The number of each piece, needed to be produced to make up the entire hand, are shown below in Table 1.

Table 1

Part	# Needed
Palm of Hand	1
Tertiary Link	5
Proximal Phalanx Link	10
Proximal Phalanx Link Bottom	5
Middle Phalanx Link	8
Middle Phalanx Link Bottom	4
Middle Phalanx Link Thumb	2
Middle Phalanx Link Thumb Bottom	1

Distal Phalanx Link	4
Distal Phalanx Link Bottom	4
Rod One	5
Rod Two	8
0.25 Pin	40
0.5 Pin	5
1.0 Pin	5

Table 1: This table shows how many of each piece were needed to complete the exoskeletal robotic hand.

5.3 Rapid Prototyper

Since it was determined best to create a model of a single finger on the rapid prototype first the base of the hand had to be modified to fit in the rapid prototyper (the entire hand would have been constructed if cost was not an issue). A picture of the modified base of the hand is shown below in Figure 16.

Figure 16

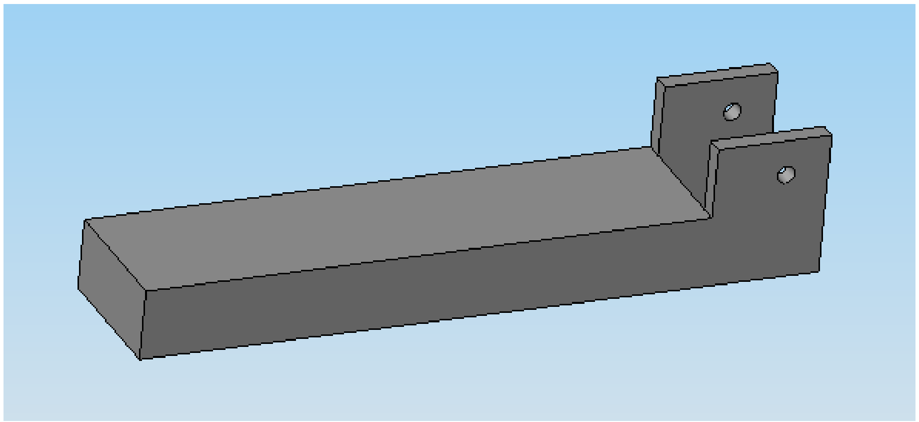

Figure 16: This figure shows the modified palm of the hand for the rapid prototyper.

The single finger was created using the rapid prototyper and the 1/8” aluminum rod (cut to needed pin length. The finger pieces were joined together with super glue after assuming that the rapid prototyper squared off all of the edges. This was not the case and each of the finger links has to be sanded to fit properly together. The pin holes also had to be cleaned out and made the proper size, since the rapid prototyper did not make perfect holes. The 1/8 inch aluminum rod was used to join the links together after it was cut and filed to size. When the finger was completely constructed it did not work as planned, there were a few mistakes made with solid works. First, the distal phalanx link bottom struck the middle phalanx link bottom and had to be sanded down approximately 1/16". The next problem was that rod 1 struck the middle phalanx link bottom, and the middle phalanx link bottom had to be sanded down approximately 1/4". After these corrections were made, the finger worked exactly as planned. The completed finger is shown below in Figure 17; the full range of motion can be seen in Appendix c.

Figure

17

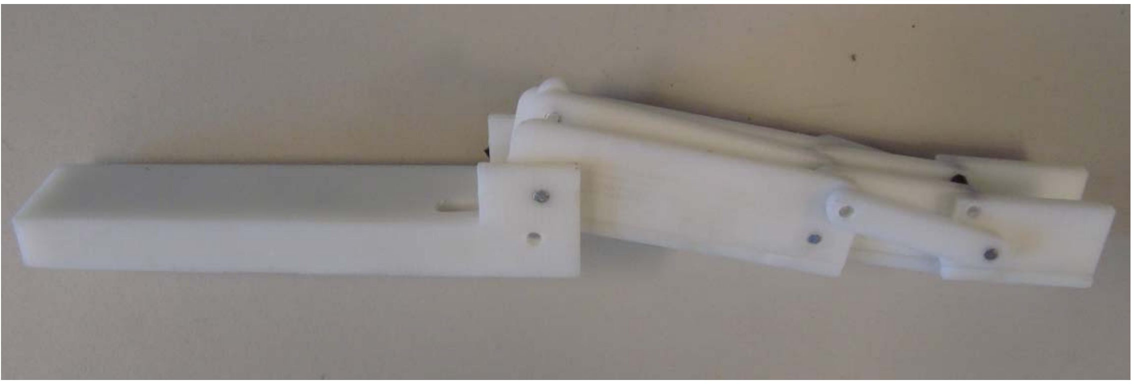

Figure 17: This figure shows the constructed finger made on the rapid prototyper.

5.4 Gear Selection

There were two major options for gearing choice: beveled gears or worms and worm gears. The first option was to use beveled gears (the teeth of both gears were at 45 degrees). This seemed to be very promising since it would allow for the motors to be mounted very low, almost directly on the base of the already designed hand. There were, however, many problems with this design, since companies did not offer all shapes and sizes. The second option was to use a worm and worm gear. Worm gears had a very large diameter, which forces the base gear to be taller than the tertiary link in the finger, so the worm gear would not interfere with the linkages. This also forced the motors to be mounted much higher than originally planned, which actually makes machining of the palm much easier since it does not need to be milled down over 1/2 an inch.

Using an online website a worm gear and base gear was downloaded in Solid Works, although the web site did not fully create the gear. It was necessary to copy the tooth pattern from the gear and completely remake the gear. This was very complicated because gears have to match perfectly to work correctly. The worm gear also had to be remade on Solid Works. After completion the gears were made on the rapid prototyper, although after construction a problem was discovered. The worm gear that the company provided was not functional, so another option must be researched. Below in Figure 18 and Figure 19 are pictures of the worm gear and base gear as created in Solid Works.

Figure 18

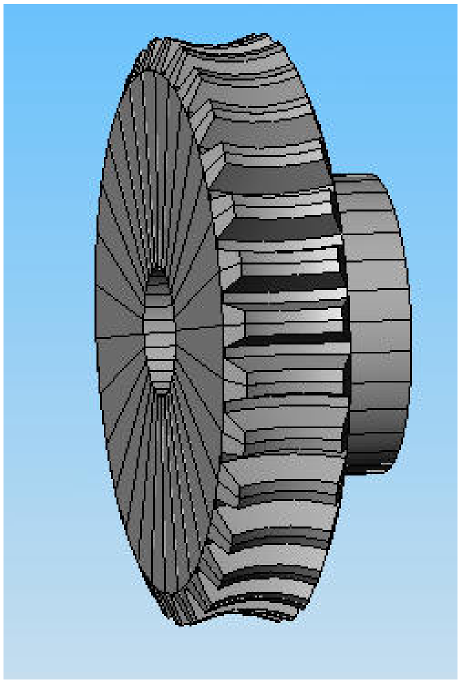

Figure 18: Shows the worm gear produced on the rapid prototyper.

Figure 19

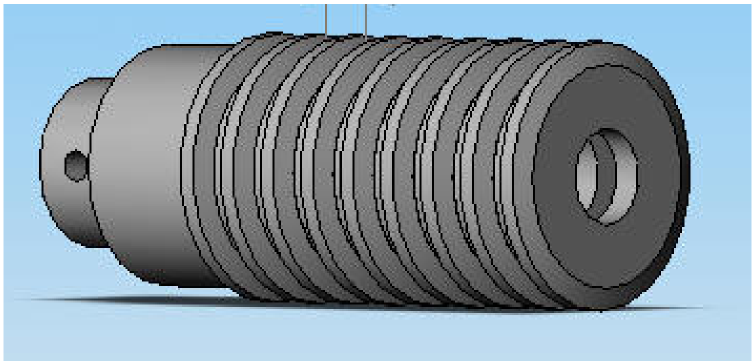

Figure 19: This figure shows the worm that was created on the rapid prototyper.

Since gears could not be downloaded online and created on the rapid prototyper they were ordered off of a website. The gears were ordered based on the overall pitch diameter, pitch angle, face width, and gear ratio. It was necessary for the gears to be strong, thus metal was the best choice. Although after the initial gear set was ordered, metals gears were on back order, therefore plastic gears had to be used in the final model. Figure 20 shows the first gear set ordered, the final set of gears are the same, but made of plastic.

Figure 20

Figure 20: This figure shows the original gears ordered, although the final set used were both plastic.

5.5 Pinning Solution

There were many different options for how to pin the links together including: partial threaded screws, male/female screws, rivets, and pins with locking rings. None of these seemed to be the right for the application, since it was very difficult to obtain the correct sizes. These could have been custom machined, but this would have taken too long due to the sheer number of joints. After studying the rapid prototyper model, where simple pins made out of

1/8" aluminum rods were used, and worked to hold the links together, while allowing hinging an important realization was made.

5.51 Solid Works Model (Bushing)

Using the material from the rapid prototyper could be made to be inserted into the aluminum pieces, then pinned together using this aluminum round stock. A bushing design was created in Solid Works and is shown below in Figure 21. The busing had an inner diameter of 1/8” to accommodate the already purchased aluminum pins. The outer diameter was made to be 3/16 to allow for 1/32” thick bushing around the pins.

Figure 21

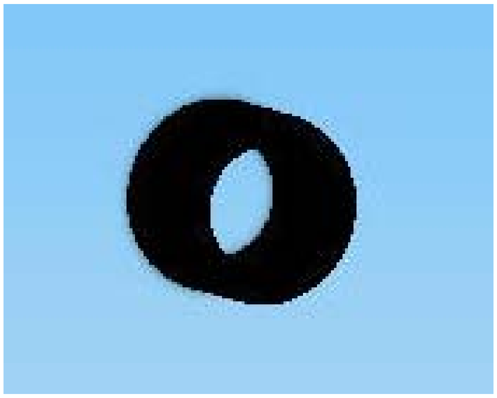

Figure 21: This figure displays the Solid Works model of the bushing.

5.52 Final Design (w/ Bushing)

Since the outer diameter of the bushing increased, the holes in the links would also have to be modified for this larger diameter. Some of these links easily accommodated the larger hole, although some of them had to be modified to accommodate larger holes, although these modifications did not affect the motion of the linkage. All of the parts were modified and re-assembled into the complete assembly of the model presented to Union College's machine shop. Below, in Figure 22, the complete assembly is shown, including the bushings. The drawings of the modified parts, as presented to Union College's machine shop, are shown in Appendix D.

Figure 22

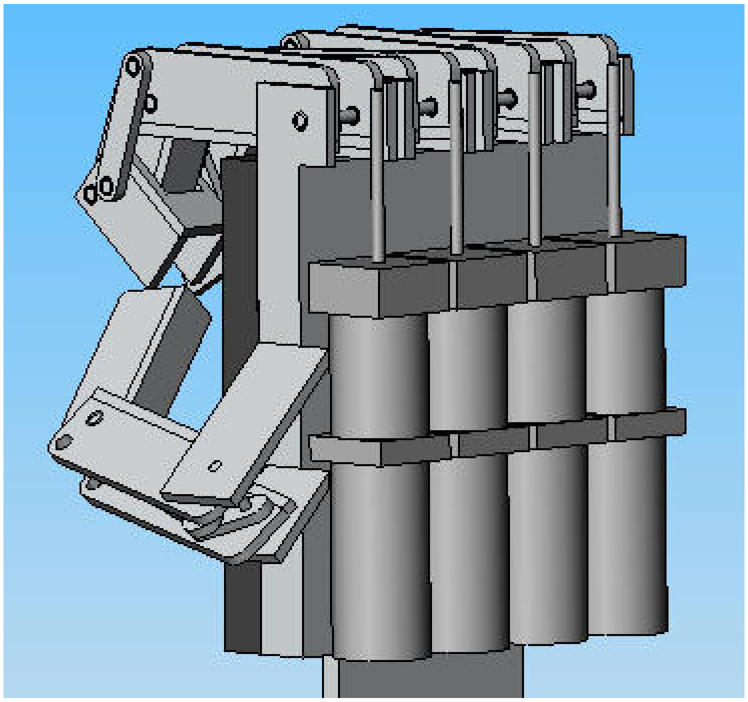

Figure 22: This figure shows the final assembly, including the bushings.

Chapter 6

Construction

6.1 Rapid Prototyper

All of the bushings were created using the rapid prototyper. The bushings were able to be pressed into the holes in the links by use of pliers. It was necessary to drill out the inner diameter of the bushings one pressed into place because the rapid prototyper created bushings with a slightly smaller inner diameter than necessary.

6.2 Machine Shop

Using the drawing created of each part, the machine shop created each part. A water jet was used to cut out all of the parts except for the base of the hand. The water jet was perfect for this project since numerous duplicates of each part were needed. The water jet only placed a small hole to locate where the 3/16” holes needed to be located. This was done to ensure concise diameter, where the holes were later drilled out by use of a drill press. The holes were then de-burred to ensure that the bushings pressed in correctly. The base of the hand was milled down using an end mill; the finger slots on the base were also cut out using this method as well. Once all of the parts were machined the finger links were welded together where necessary. The welds were then ground down to ensure proper motion of the linkage. The gears had a square cut out of the inner diameter to act as a keyway for the tertiary link’s key (square piece that stuck out). Once the machine shop was done with the welding the bushings were pressed into place. The rods were then cut to length using a band saw then the edges were filed. Each finger was then assembled using the previously cut pins and then attached to the base of the hand complete with worm gear.

6.3 Working Prototype

The electric motors were then mounted to the base of the hand in the previously drilled mounting holes. The worms were attached to the electric motors output shafts, and meshed perfectly to the worm gear. The motors were then connected to the electronic system, which was previously. The prototype was then tested for correct motion. The prototype displayed the correct motion in the linkage, although the output force was significantly lower than expected. Part of this was due to the plastic gears, which slipped under force, the rest caused due to weak motors. Below, in Figure 23, the robotic hand is shown; more pictures are displayed in Appendix E.

Figure 23

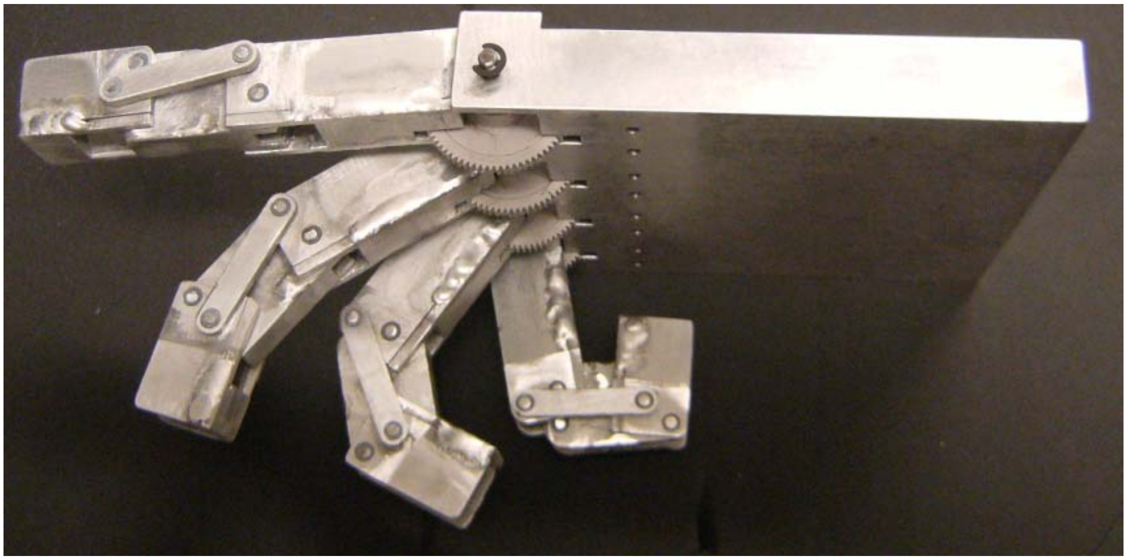

Figure 23: This figure shows the completed (mechanically) exoskeletal hand.

Chapter 7

Future Work

Future work for the design includes incorporating the thumb into the already assembled hand. Looking into using pneumatics or hydraulics, while changing the linkage to accommodate these options, would greatly increase the output gripping force. Also any future models should have the finger links machined out of square stock, which will increase the strength of the links.

Bibliography

Barton, Dave. "Trying to weld 2024 Al is not worth the trouble." Welding Magazine. 10 Sept. 2008. 6 Jan. 2009 <http://weldingmag.com/barton/2042_not_worth_trouble/>.

ElKoura, George, and Karin Singh. "Handrix: Animating the Human Hand." 2002-2003. University of Toronto. 10 Sept. 2008 <http://www.dgp.toronto.edu/~gelkoura/handrix/paper.html>.

Fukaya, Naoki, Shigeki Toyama, Tamim Asfour, and Rüdiger Dillmann. "Design of the TUAT/Karlsruhe Humanoid Hand." Tokyo University of Agriculture and Technology & University of Karlsruhe. 24 Sept. 2008 <http://www.sfb588.uni-karlsruhe.de/publikationen/2000_16.pdf>.

"Hand Prosthesis with Voluntary Opening." Robotics Labratory. 1997-2008. University of Laval. 23 Sept. 2008 <http://robot.gmc.ulaval.ca/en/research/theme307.html>.

"Introduction to Under-Actuation." Robotics Labratory. 1997-2008. University of Laval. 23 Sept. 2008 <http://robot.gmc.ulaval.ca/en/research/theme301.html>.

Kulley, Marlowe. "Bio 108 - Organ Replacement - Hand Prosthetics - Bio Mechanics." Hand Prosthetics. 28 Apr. 2003. Brown University. 10 Sept. 2008 <http://biomed.brown.edu/courses/bi108/bi108_2003_groups/hand_prosthetics/index.html>.

"Micro-Actuators Move Sensitive 4-Finger Hand." Faulhaber. 21 Sept. 2008 <http://www.faulhaber-group.com/n273481/n.html>.

MIYATA, Natsuki. "Modeling of the Human Hand Link Structure from Optical Motion Capture Data." Sept.-Oct. 2004. Digital Human Research Center. 12 Sept. 2008 <http://ieeexplore.ieee.org/iel5/9577/30277/01389724.pdf>.

"Pneumatically-Driven Robotic Hand." Robotics Labratory. 1997-2008. University of Laval. 23 Sept. 2008 <http://robot.gmc.ulaval.ca/en/research/theme305.html>.

Taylor, Craig L., and Robert J. Schwarz. "The Anatomy and Mechanics of the Human Hand." The Orthotics and Prosthetics Virtual Library. 10 Sept. 2008 <http://www.oandplibrary.org/al/1955_02_022.asp?mode=print>.

"The MARS Hand." Robotics Labratory. 1997-2008. University of Laval. 23 Sept. 2008 <http://robot.gmc.ulaval.ca/en/research/theme303.html>.

"SARAH Hand." Robotics Labratory. 1997-2008. University of Laval. 23 Sept. 2008 <http://robot.gmc.ulaval.ca/en/research/theme304.html>.

Yamano, Ikuo, and Takashi Maeno. "Five-fingered Robot Hand using Ultrasonic Motors and." Apr. 2005. 25 Sept. 2008 <http://www.maeno.mech.keio.ac.jp/english/icra2005_yamano.pdf>.

Appendix A

NOT DRAWN TO SCALE (IN INCHES)

10-15-2008 → 10-17-2008

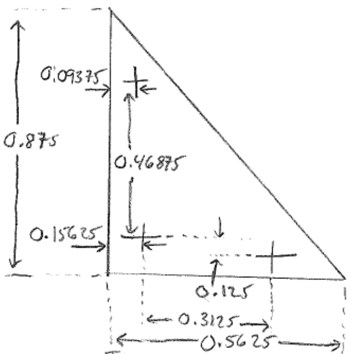

TERTIARY LINK

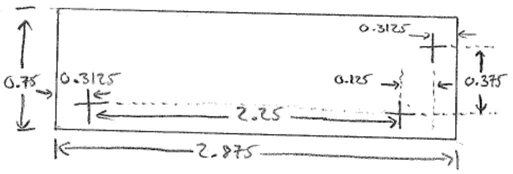

PROXIMAL PHALANX

Notes:

- Not actually a right triangle in the design, simplified for Working Model software.

Working Model

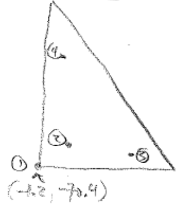

Global Coordinates

① (-1.2, -70.4)
② (-1.04375, -70.196875)
③ (-0.73125, -70.321875)
④ (-1.04375, -69.778125)

Notes:

- edges rounded, simplified for Working Model.

Working Model

Global Coordinates

① (-0.450, -70.340)
② (-0.1375, -70.1525)
③ (2.1125, -70.1525)
④ (2.2375, -69.7775)

NOT DRAWN TO SCALE (IN INCHES)

10-15-2008 → 10-17-2008

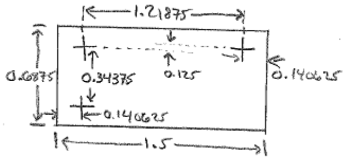

MIDDLE PHALANX

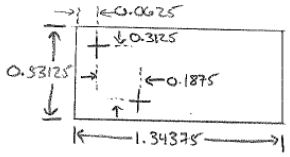

DISTAL PHALANX

NOTES:

- edges rounded, simplified for Working Model.

Working Model

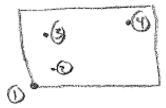

Global Coordinates

① (2.6, -70.350)
② (2.740625, -70.178125)
③ (2.740625, -69.834375)
④ (3.959375, -69.709375

NOTES:

- edges rounded, simplified for Working Model.

Working Model

Global Coordinates

① (4.450, -70.350)
② (4.7, -70.240625)
③ (4.5125, -69.928125)

10-15-2008 → 10-17-2008

NOT DRAWN TO SCALE (IN INCHES)

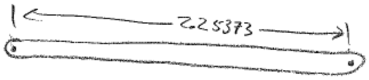

ROD 1

(BETWEEN TERTEAIRY LINK & MIDDLE PHALANX)

NOTES:

- may use rod as link instead of mechined piece.

Working Model

- used rod function, instead of making a link

Global Coordinates (N/A)

① length = 2.25373

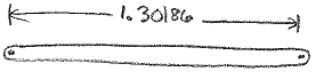

ROD 2

(BETWEEN PROXIMAL PHALANX & DISTAL PHALANX)

NOTES:

- may use rod as link instead of mechined piece.

Working Model

- used rod function, instead of making a link

Global Coordinates (N/A)

① length = 1.30186

Appendix B

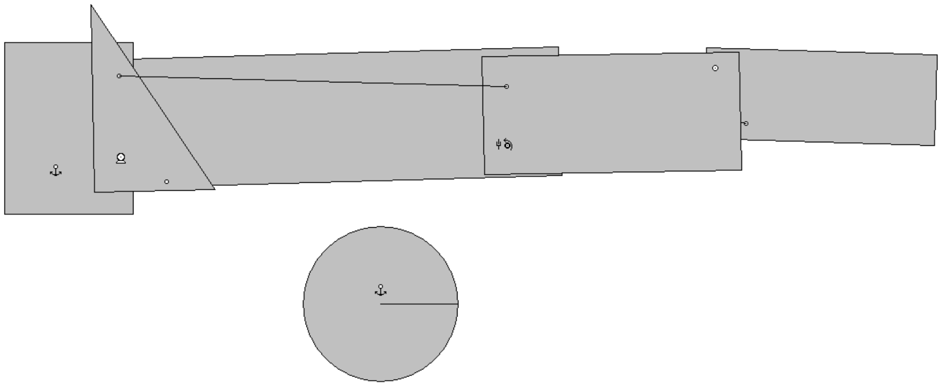

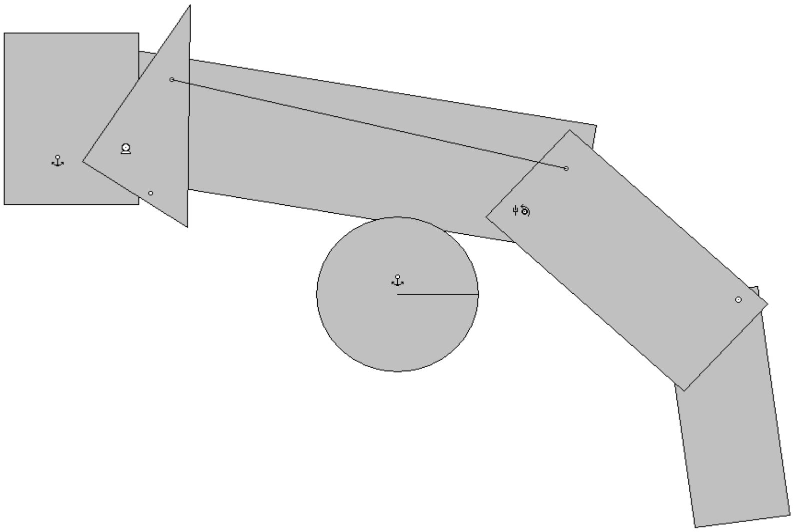

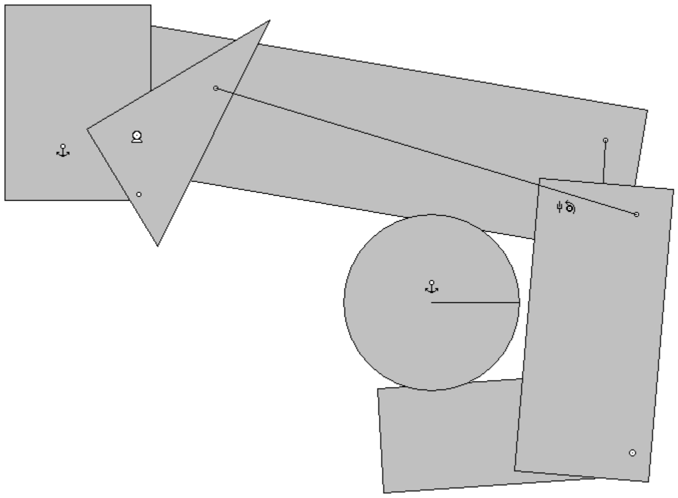

Appendix C

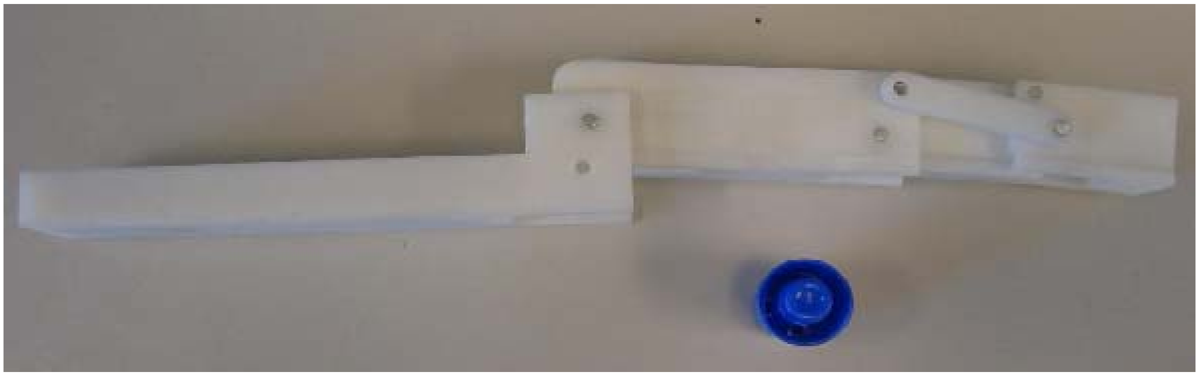

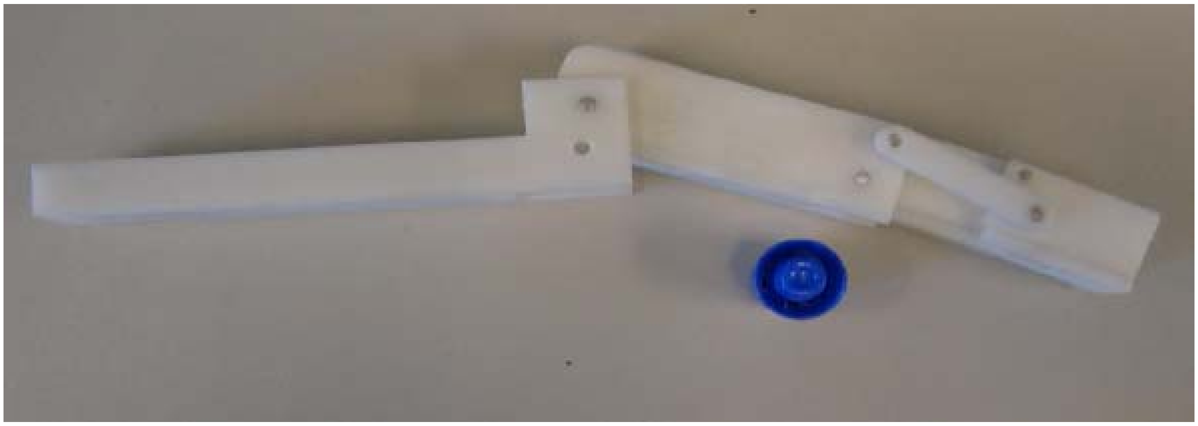

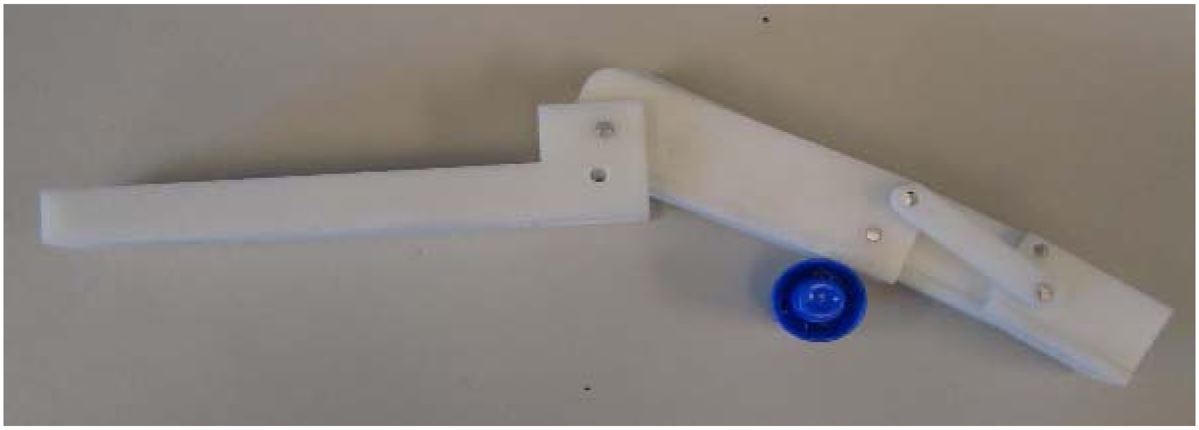

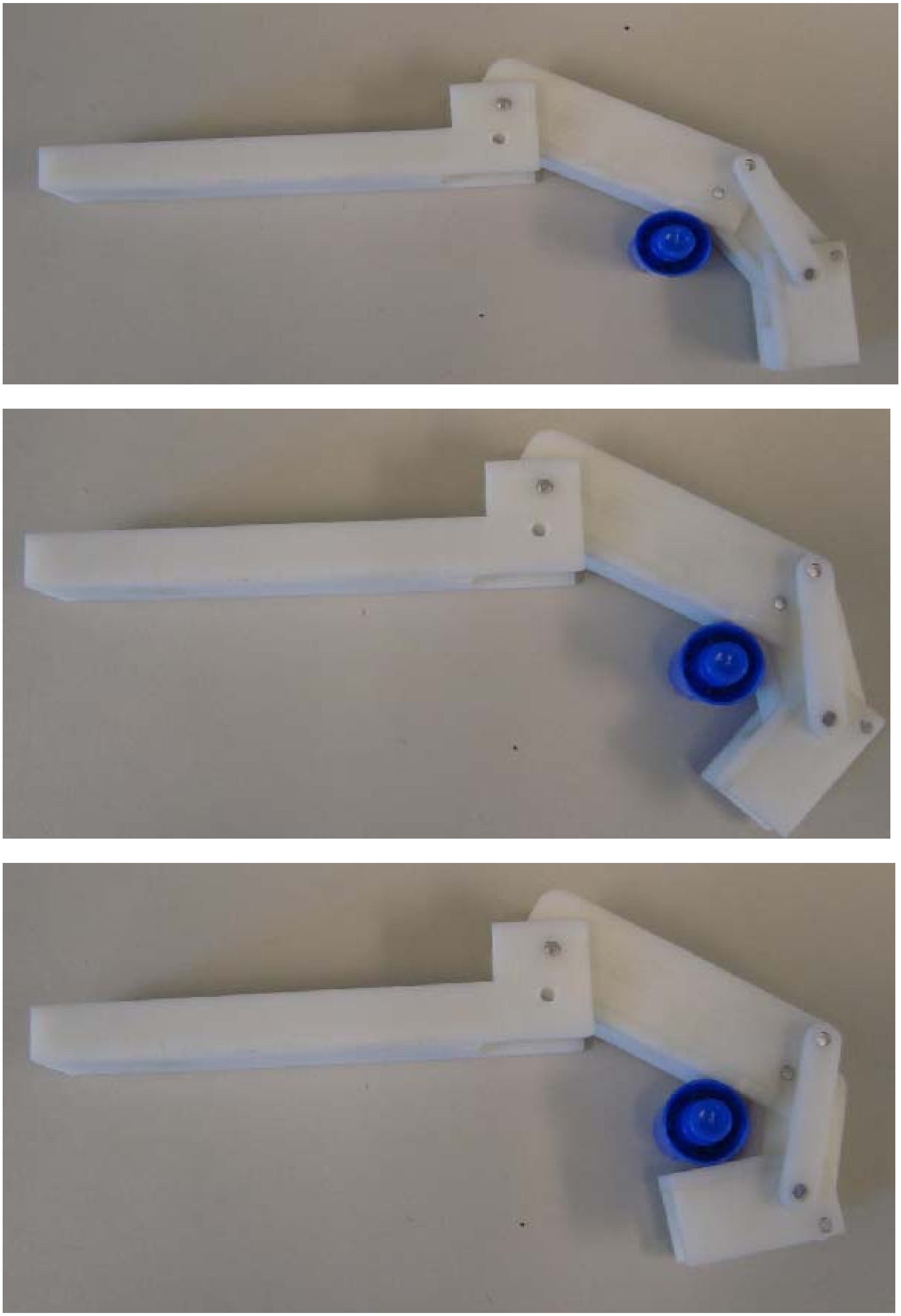

Appendix D

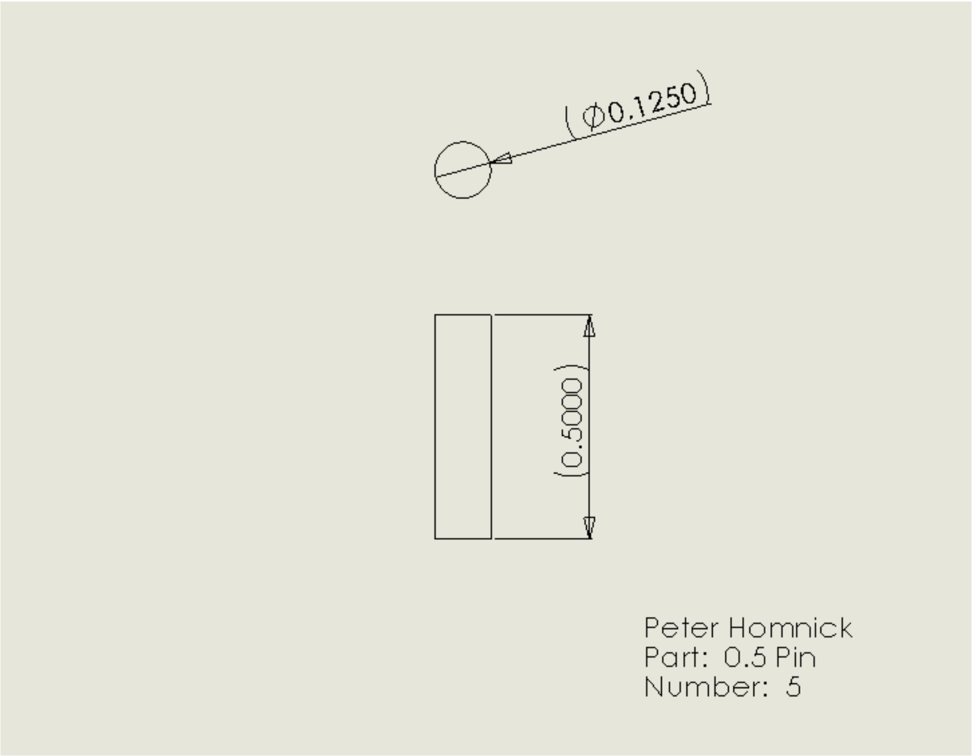
(⌀0.1250)
(0.5000)
Peter Homnick
Part: 0.5 Pin
Number: 5

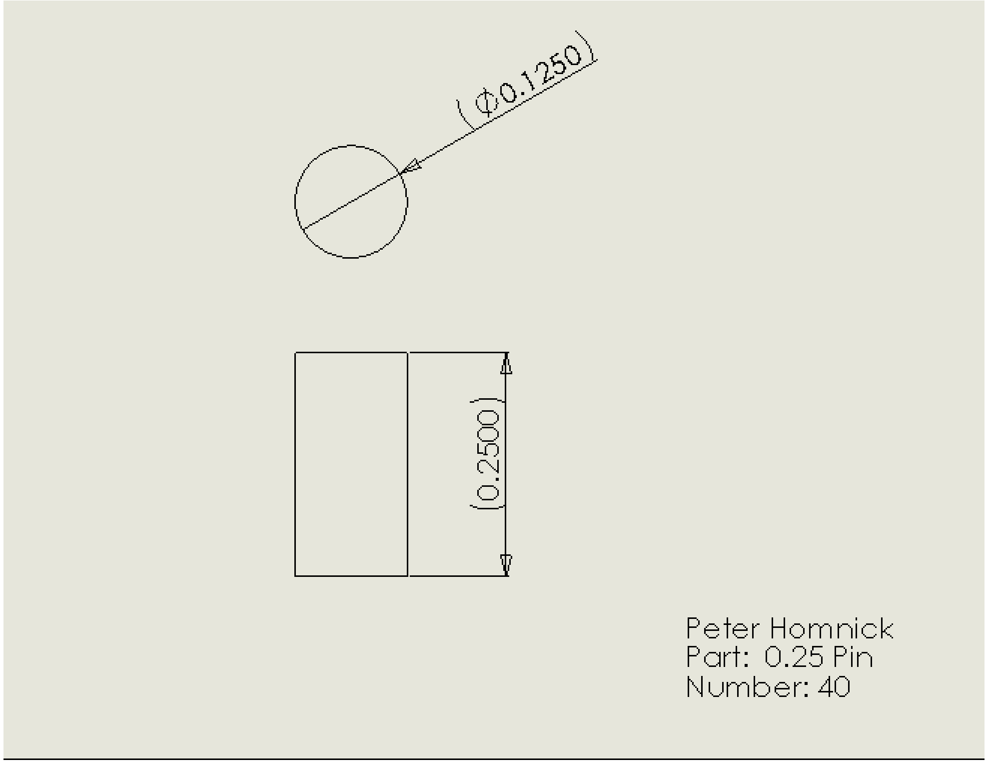
(⌀0.1250)
(0.2500)
Peter Homnick
Part: 0.25 Pin
Number: 40

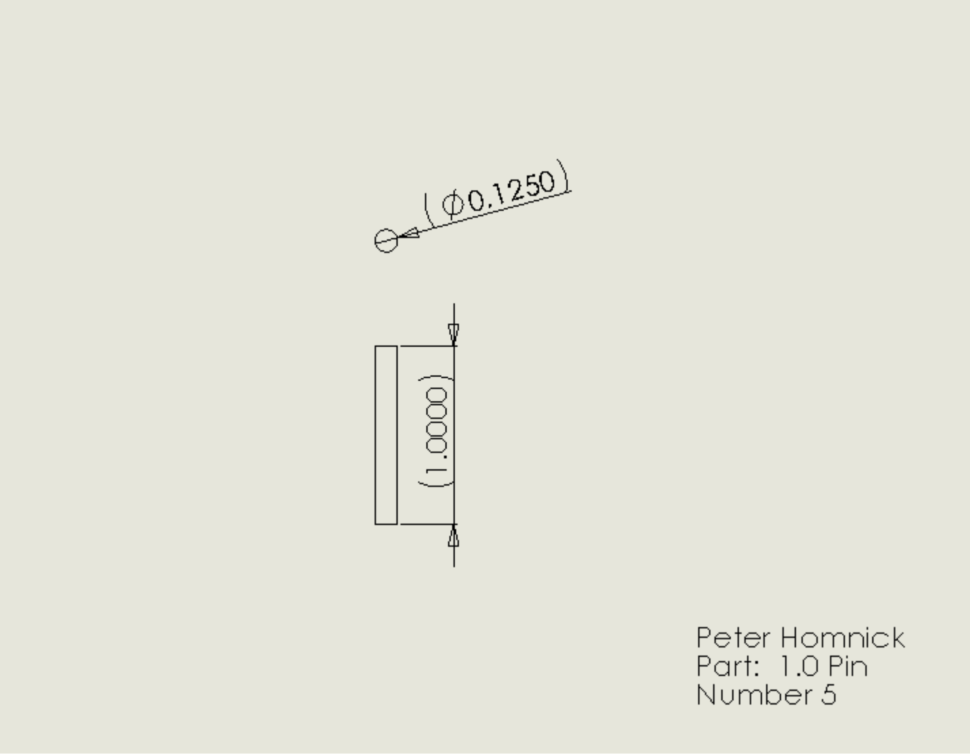

Peter Homnick
Part: 1.0 Pin
Number 5

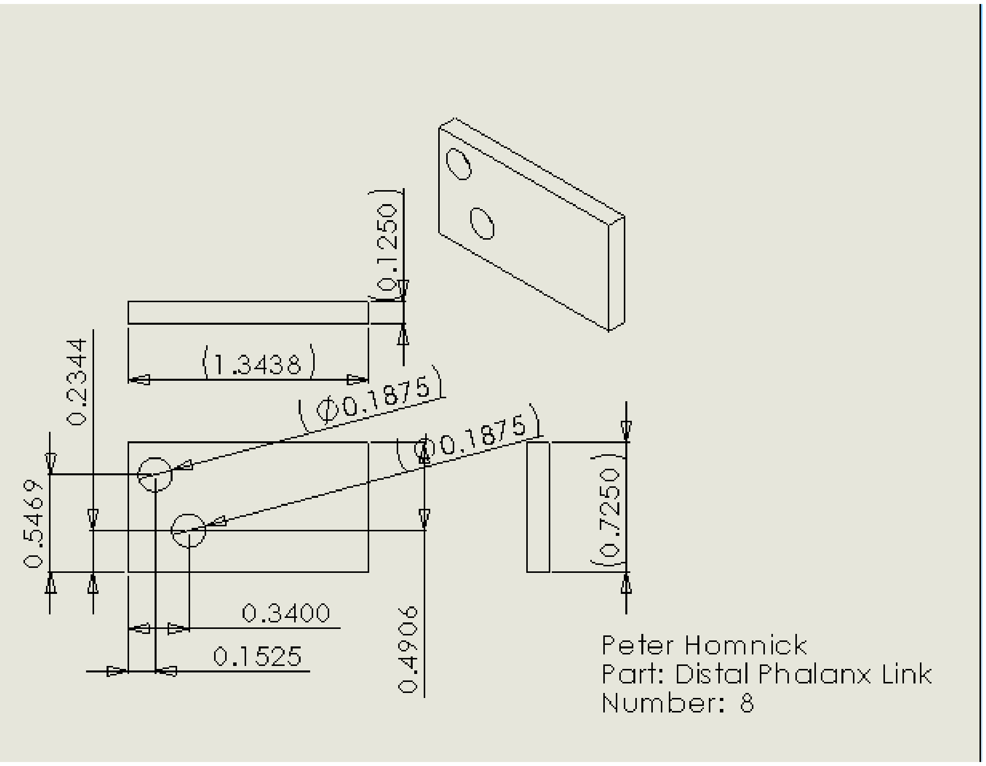

Peter Homnick
Part: Distal Phalanx Link
Number: 8

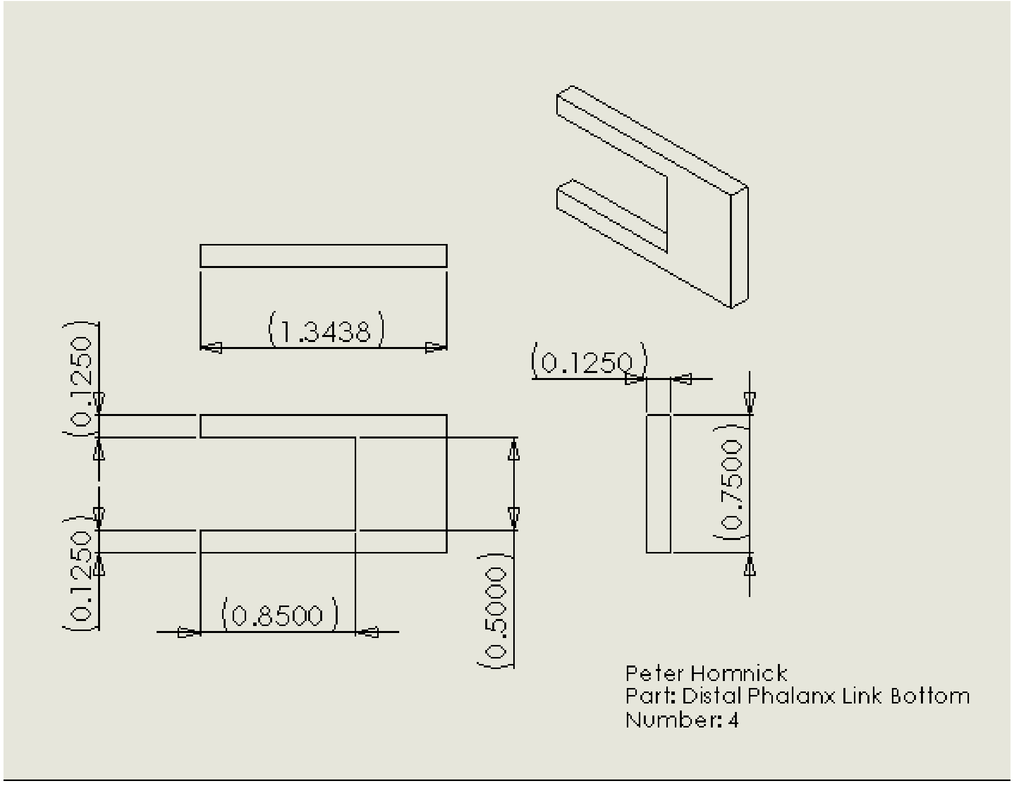

Peter Homnick
Part: Distal Phalanx Link Bottom
Number: 4

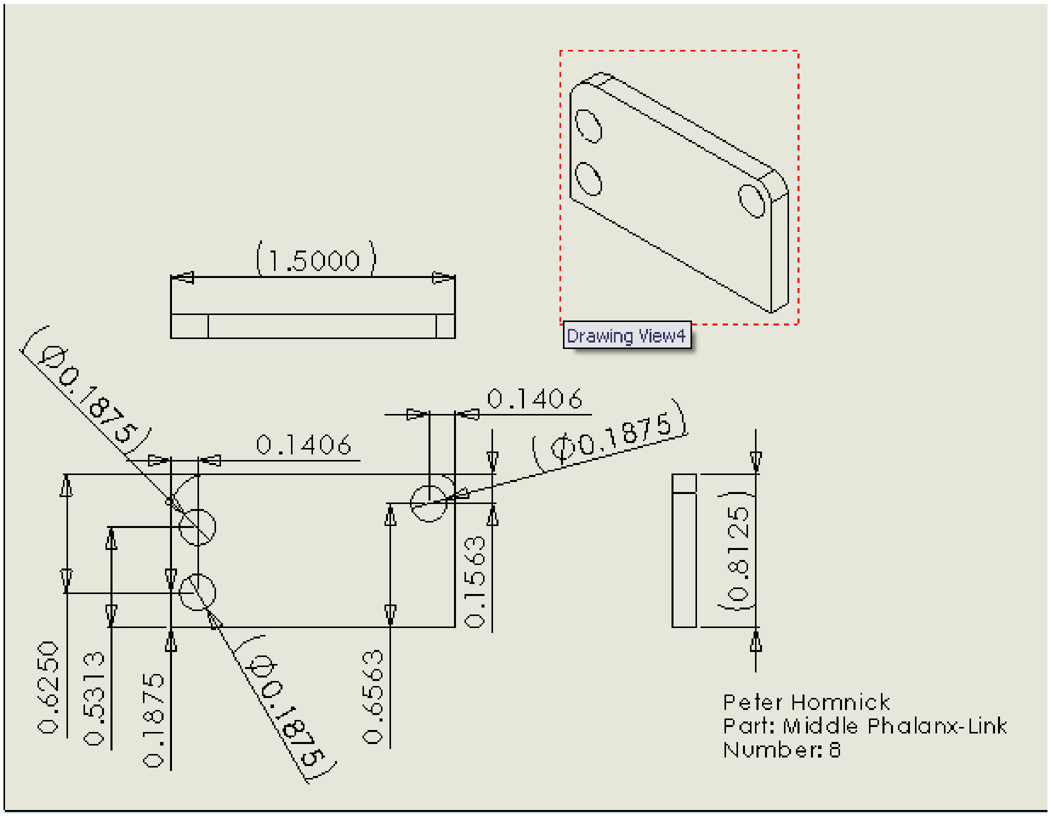

Peter Homnick
Part: Middle Phalanx-Link
Number: 8

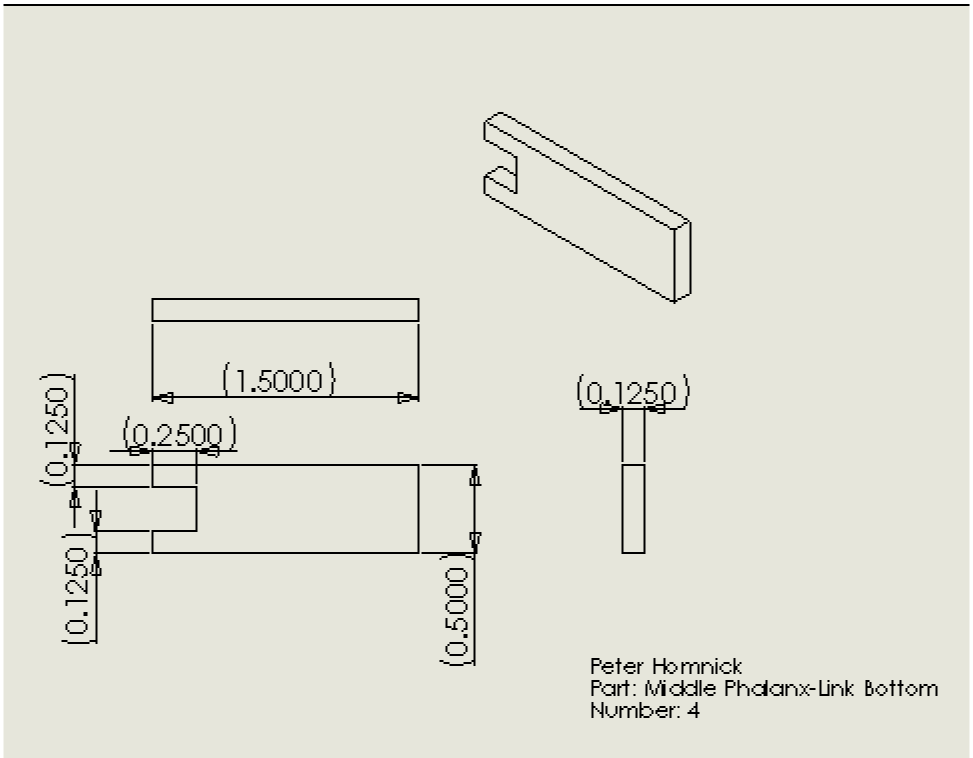

Peter Homnick
Part: Middle Phalanx-Link Bottom
Number: 4

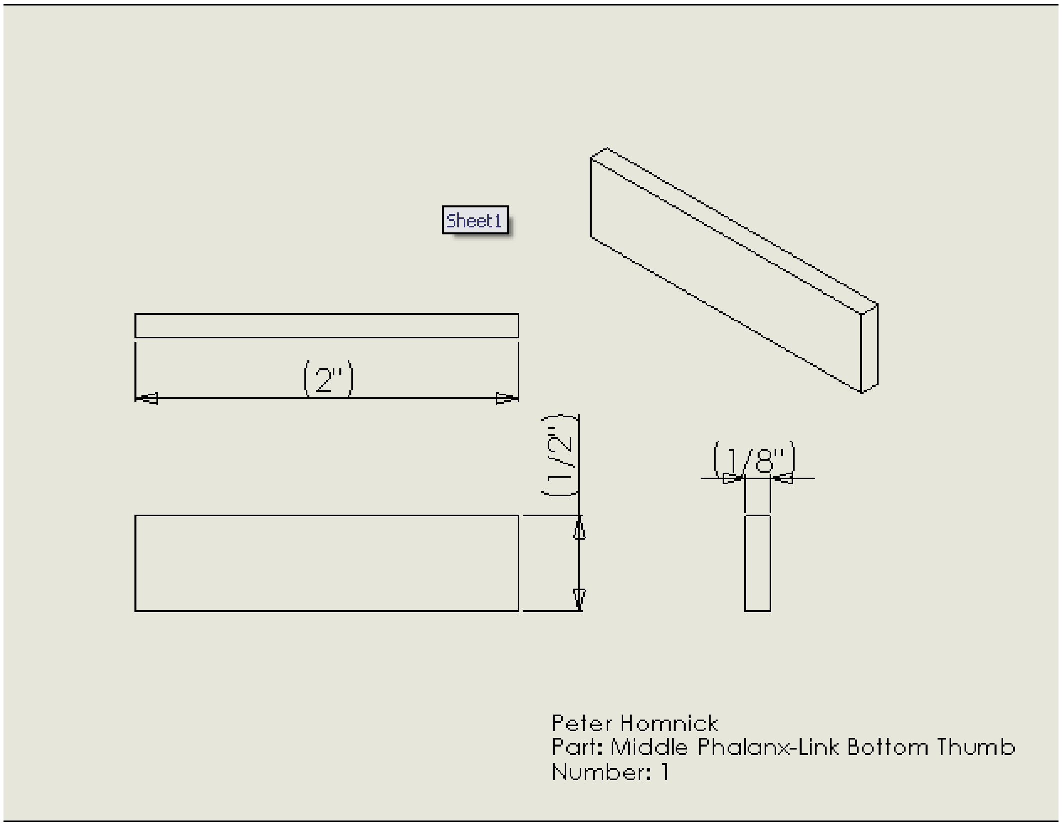

Peter Homnick
Part: Middle Phalanx-Link Bottom Thumb
Number: 1

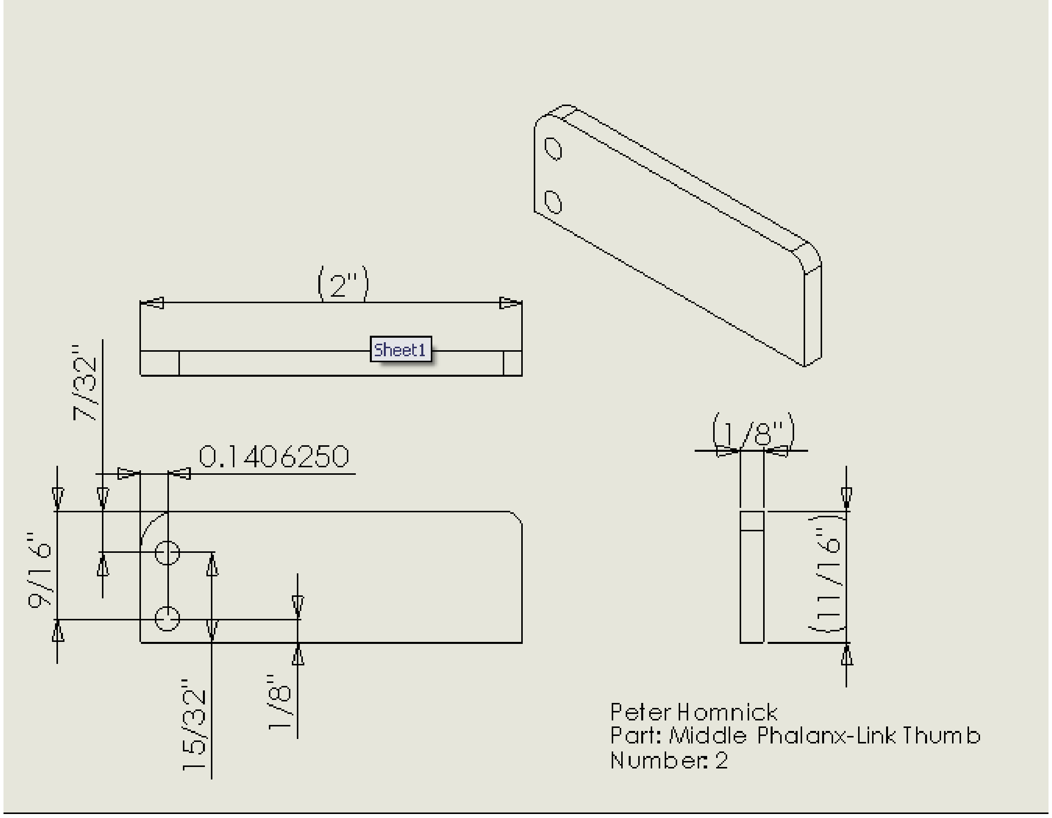

Peter Homnick
Part: Middle Phalanx-Link Thumb
Number: 2

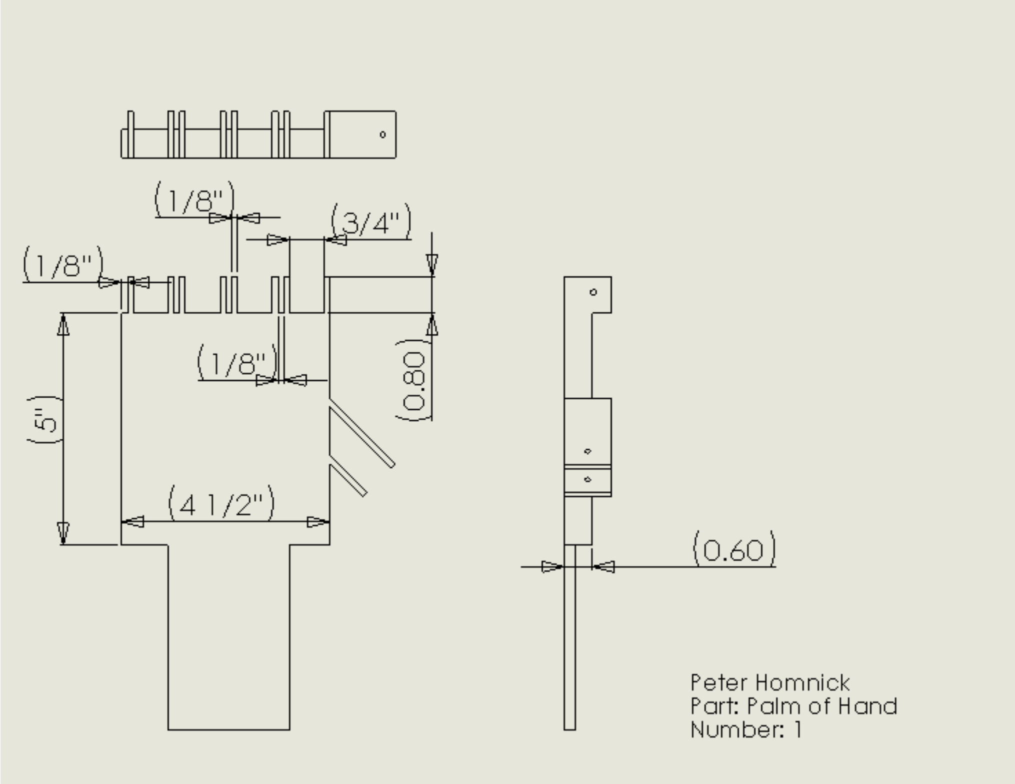

Peter Homnick
Part: Palm of Hand
Number: 1

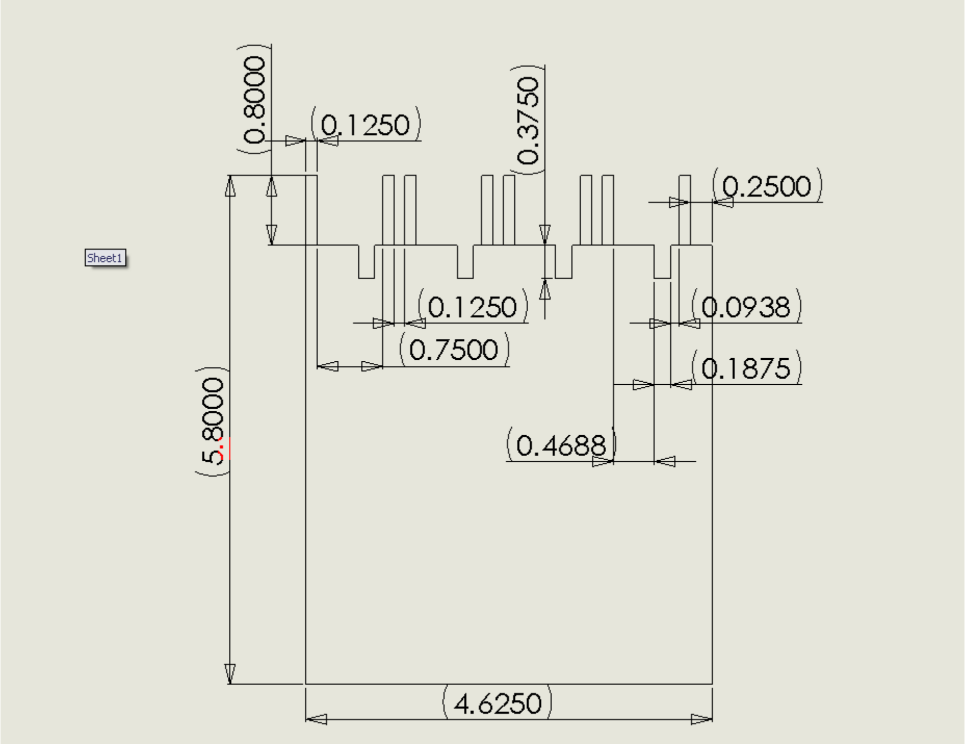

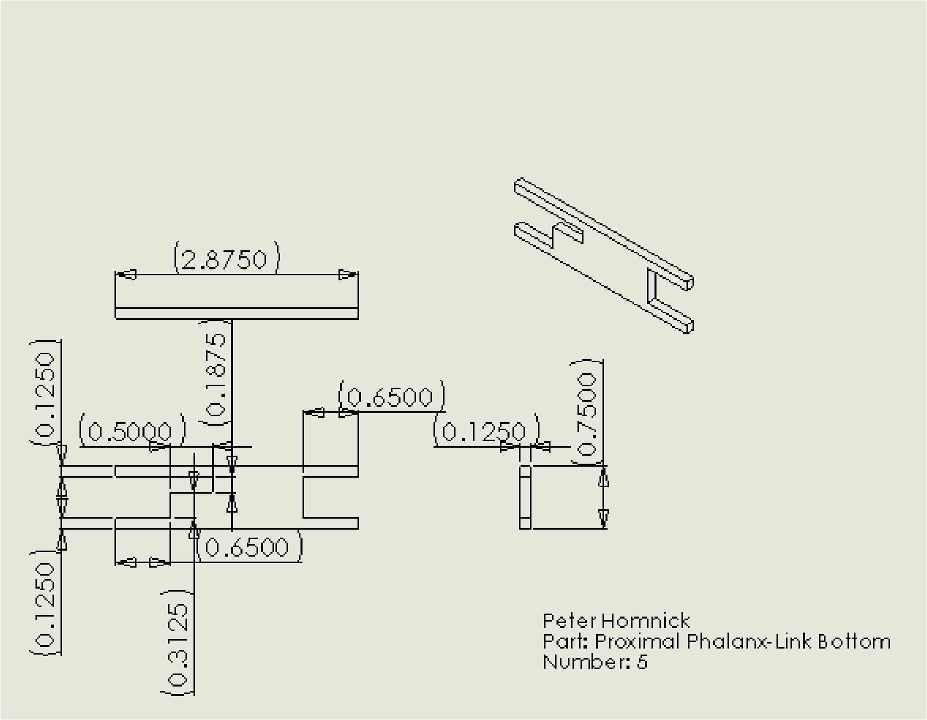

Peter Homnick
Part: Proximal Phalanx-Link Bottom
Number: 5

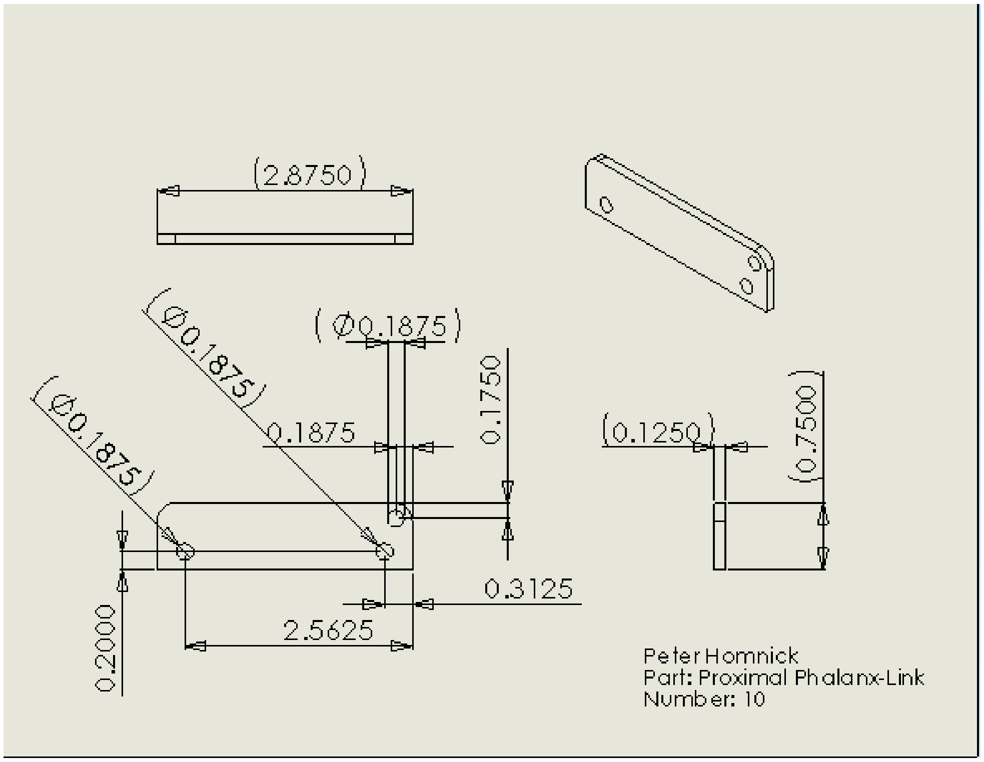
(2.8750)
(Ø0.1875)
(Ø0.1875)
(Ø0.1875)
0.1875
0.1750
(0.1250)
(0.7500)
0.2000
0.3125
2.5625
Peter Homnick
Part: Proximal Phalanx-Link
Number: 10

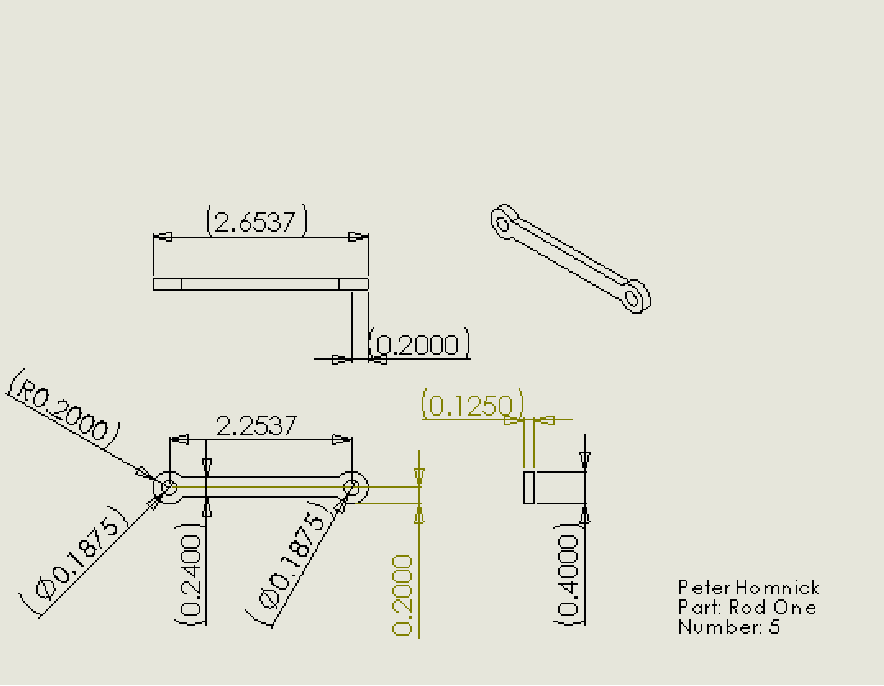
(2.6537)
(0.2000)
(R0.2000)
2.2537
(0.1250)
(Ø0.1875)
(0.2400)
(Ø0.1875)
0.2000
(0.4000)
Peter Homnick
Part: Rod One
Number: 5

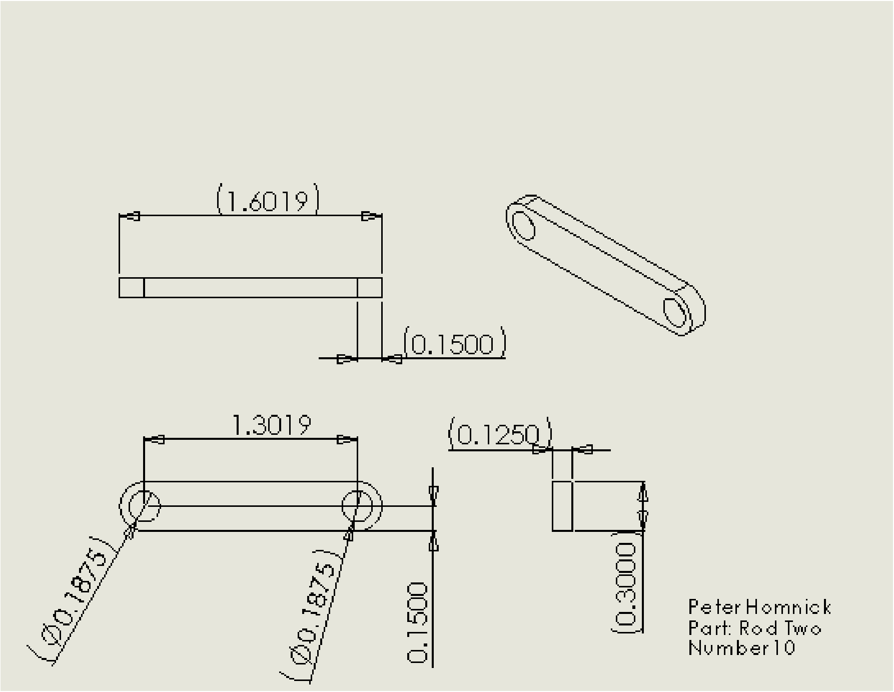
(1.6019)
(0.1500)
1.3019
(0.1250)
(Ø0.1875)
(Ø0.1875)
0.1500
(0.3000)
Peter Homnick
Part: Rod Two
Number 10

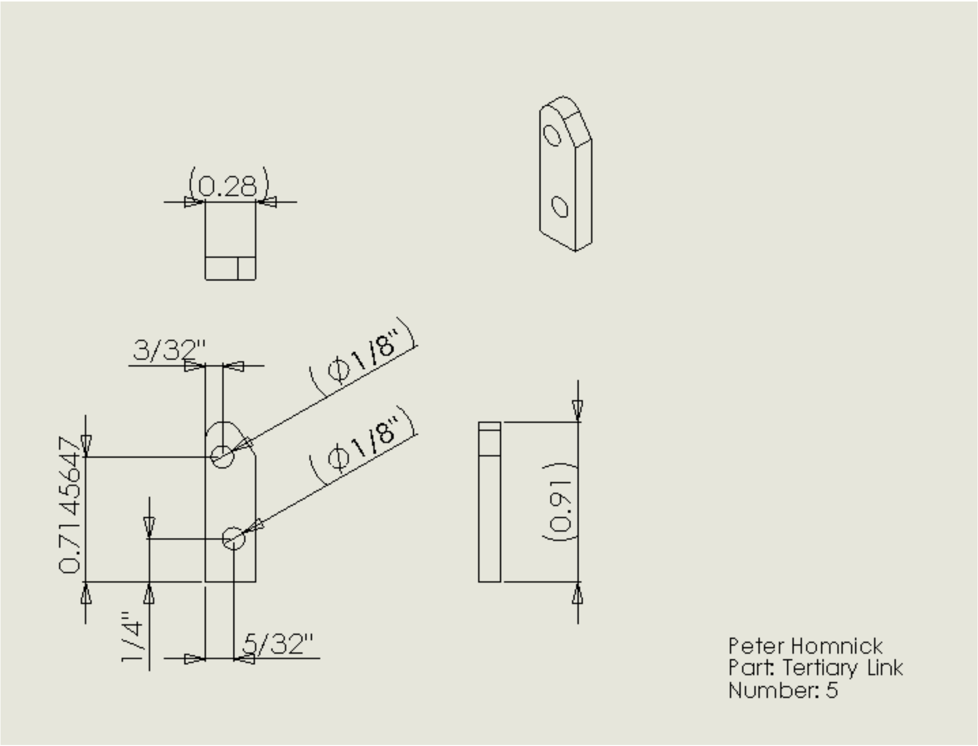
(0.28)
3/32"
(Ø1/8")
(Ø1/8")
0.7145647
1/4"
5/32"
(0.91)
Peter Homnick
Part: Tertiary Link
Number: 5

Appendix E

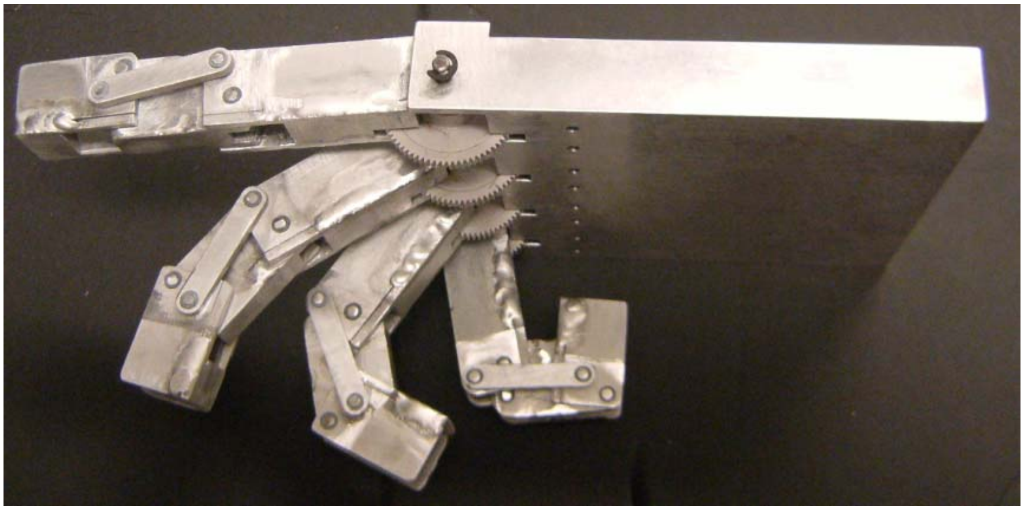

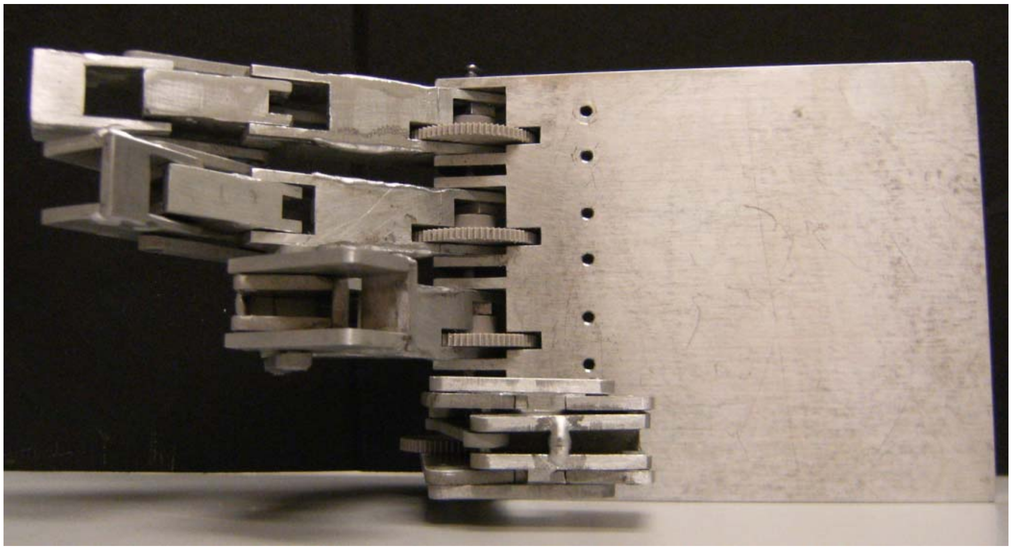

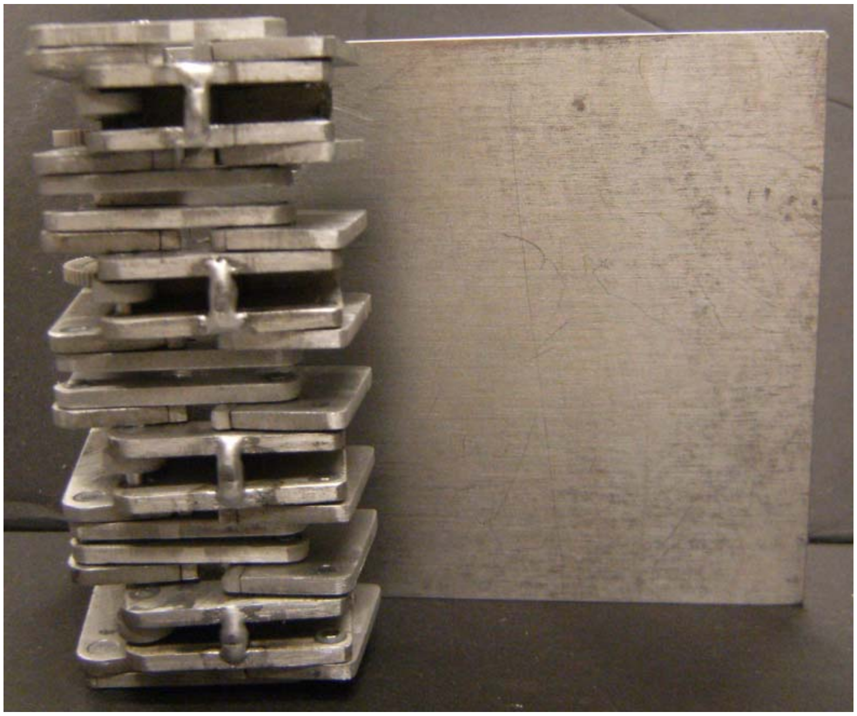

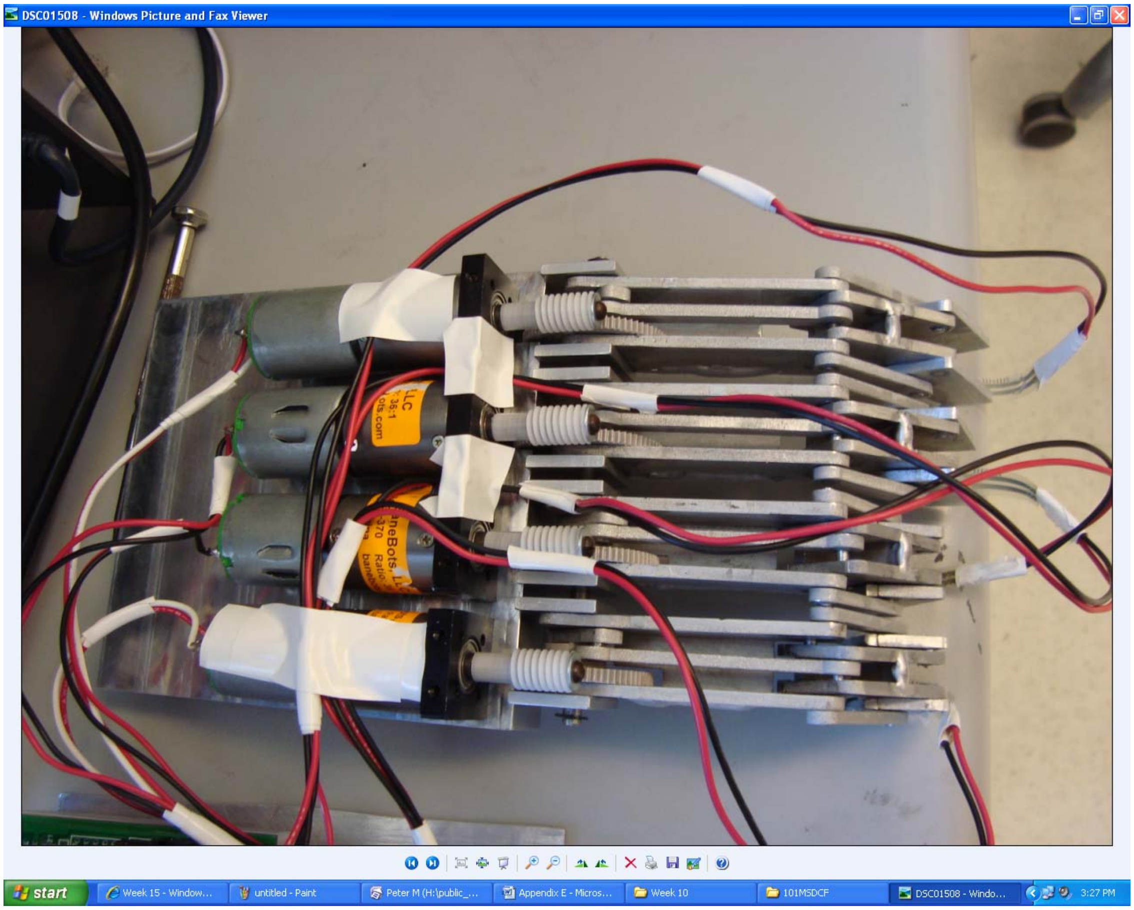
DSC01508 - Windows Picture and Fax Viewer
start
Week 15 - Window...
untitled - Paint
Peter M (H:\public_...
Appendix E - Micros...
Week 10
101MSDCF
DSC01508 - Windo...
3:27 PM

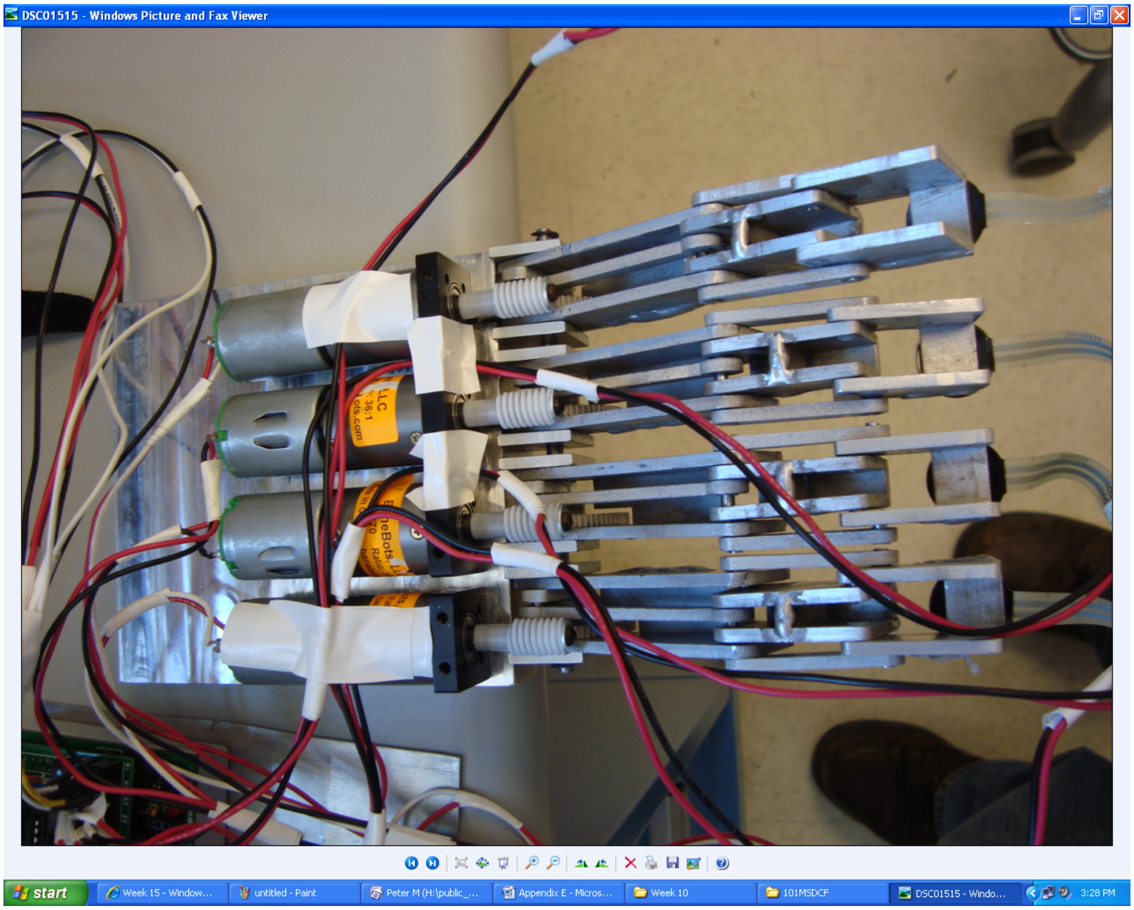
DSC01515 - Windows Picture and Fax Viewer
start
Week 15 - Window...
untitled - Paint
Peter M (H:\public_...
Appendix E - Micros...
Week 10
101MSDCF
DSC01515 - Windo...
3:28 PM

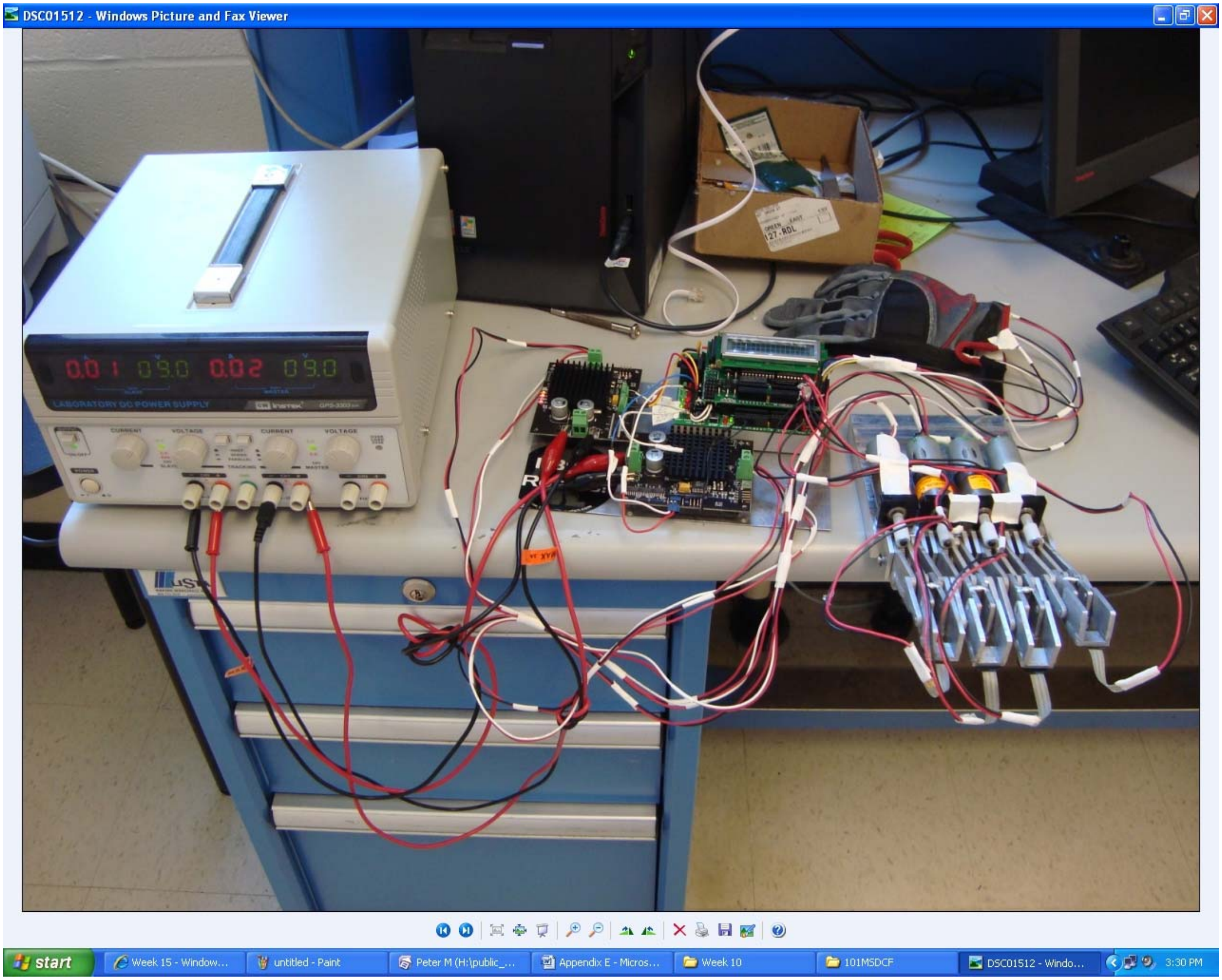
DSC01512 - Windows Picture and Fax Viewer
0.01
09.0
0.02
09.0
LABORATORY DC POWER SUPPLY
GW Instek
start
Week 15 - Window...
untitled - Paint
Peter M (H:\public_...
Appendix E - Micros...
Week 10
101MSDCF
DSC01512 - Windo...
3:30 PM